MOBOLE VERTICAL LIFTS

OPERATOR'S MANUAL

with Maintenance Information

(For GTWY9.5-2100/GTWY11-2100/GTWY12.5-2100/GTWY14-2100)



WARNING

THE MANUFACTURER SHALL NOT BE HELD LIABLE IN CASE OF FAULTS OR ACCIDENTS DUE TO NEGLIGENCE, INCAPACITY, INSTALLATION BY UNQUALIFIED TECHNICIANS AND IMPROPER USE OF THE MACHINE

DO NOT OPERATE THIS MACHINE UNTIL YOU READ AND UNDERSTAND ALL THE DANGERS,WARNINGS AND CAUTIONS IN THIS MANUAL

Part Number: SM0619113_Rev1.0

Zhejiang Dingli Machinery Co., Ltd. First Edition, October 2019 Printing

Version of the Record

Version Number	Create Date
SM0619113_Rev1.0	2019-10

Important

Read, understand and obey these safety rules and operating instructions before operating this machine.

Only trained and authorized personnel shall be permitted to operate this machine. This manual should be considered a permanent part of your machine and should remain with the machine at all times. If you have any questions, please call DINGLI Machinery.

Owners, Users and operators:

Dingli appreciates your choice of our machine for your application. User's safety is our priority, so we hope you can:

1 Comply with employer, job site and governmental rules.

2 Read, understand and follow the instructions in this and other manuals supplied with this machine.

3 Use good safe work practices in a commonsense way.

4 Only have trained / certified operators, directed by informed and knowledgeable supervision, running the machine.

If there is anything in this manual that is not clear or which you believe should be added, please contact us.

Contents

	Page
Safety Rules	1
Legend	6
Decals	8
Specifications	22
Control panel	25
Pre-operation Inspection	28
Workplace Inspection	30
Function Tests	31
Operating Instructions	34
Transport and storage Instructions	39
Maintenance	41
Schematic	58
Inspection and Repair Log	65

Contact us:

Zhejiang Dingli Machinery Co., Ltd.

1255 Baiyun South Road. Leidian Town. Deqing Zhejiang

China

Tel: +86-572-8681688

Fax: +86-572-8681690

Web: www.cndingli.com

E-mail:market@cndingli.com

Safety Rules



Danger

Failure to obey the instructions and safety rules in this manual will result in death or serious injury.

Do Not Operate Unless:

☑ You learn and practice the principles of safe machine operation contained in this operator's manual.

1 Avoid hazardous situations.

Know and understand the safety rules before going on to the next section.

2 Always perform a pre-operation inspection.

3 Always perform function tests prior to use.

4 Inspect the workplace.

5 Only use the machine as it was intended.

☑ You read, understand and obey the manufacturer's instructions and safety rules— safety and operator's manuals and machine decals.

☑ You read, understand and obey employer's safety rules and worksite regulations.

☑ You read, understand and obey all applicable governmental regulations.

☑ You are properly trained to safely operate the machine.

Decal Legend

DINGLI product decals use symbols, color coding and signal words to identify the following:

 Safety alert symbol — used to alert personnel to potential personal injury hazards. Obey all safety messages that follow this symbol to avoid possible injury or death.



Red — used to indicate the presence of an imminently hazardous situation which, if not avoided, will result in death or serious injury.



Orange — used to indicate the presence of a potentially hazardous situation which, if not avoided, could result in death or serious injury.



Yellow with safety alert symbol — used to indicate the presence of a potentially hazardous situation which, if not avoided, may cause minor or moderate injury.



Blue without safety alert symbol — used to indicate the presence of a potentially hazardous situation which, if not avoided, may result in property damage.

Safety Rules

Intended Use

This machine is intended to be used only to lift personnel, along with their tools and materials to an aerial work site.

This machine is intended for use INDOORS ONLY, and must not be used outdoors as wind forces may make it unstable.

Safety Sign Maintenance

Replace any missing or damaged safety signs. Keep operator safety in mind at all times. Use mild soap and water to clean safety signs. Do not use solvent-based cleaners because they may damage the safety sign material.

Operator

Only the trained and qualified are permitted to operate this machine. Always use safety belt and helmet when aerially working.

If you are subject to dizziness or seizures, or are bothered by heights, you must not operate this type of machinery.

An operator must not use drugs or alcohol that can change his/her alertness or coordination. An operator on prescription or over-the-counter drugs needs medical advice on whether or not he/she can safely operate machines.

⚠ Electrocution Hazard



This machine is not electrically insulated and will not provide protection from contact with or proximity to electrical current.

Maintain safe distances from electrical power lines and apparatus in accordance with applicable governmental regulations and the following chart.

Voltage Phase to Phase	Minimum Safe Approach Distance Meters
0 to 300V	Avoid Contact
300V to 50kV	3.05
50kV to 200kV	4.60
200kV to 350kV	6.10
350kV to 500kV	7.62
500kV to 750kV	10.67
750kV to 1000kV	13.72

Keep away from the machine if it contacts energized power lines. Personnel on the ground or in the platform must not touch or operate the machine until energized power lines are shut off.

Do not use the machine as a ground for welding.

Do not operate an AC powered machine or a DC battery charger unless using a 3-wire.

⚠ Tip-over Hazard

This machine is intended for use **INDOORS ONLY,** and must not be used outdoors as wind forces may make it unstable.

Occupants, equipment and materials must not exceed the maximum platform capacity.

Maximum capacity/occupants

GTWY9.5-2100	300kg	2person
GTWY11-2100	300kg	2person
GTWY12.5-2100	250kg	2person
GTWY14-2100	200kg	2person

Work Area Safety

Do not raise the platform unless all four outriggers are properly installed, the footpads firmly contact the floor and the base is level.

Do not adjust or remove the outriggers while the platform is occupied or raised.

Do not move the machine while the platform is raised.

Do not place ladders or scaffolds in the platform or against any part of this machine.





Do not place or attach overhanging loads to any part of this machine.

Do not transport tools and materials unless they are evenly distributed and can be safely handled by the person in the platform.

Do not raise the platform unless the machine is level. Do not set the machine up on a surface where it cannot be leveled using only the leveling jacks.

Do not place loads outside the platform perimeter.

Do not operate the machine near drop-offs, holes, bumps, debris, unstable or slippery surfaces or other possible hazardous conditions.

When moving the machine with a forklift or other transport vehicle, the platform should be fully lowered, the machine should be turned off and no personnel shall remain in the platform.

Do not push off or pull toward any object outside the platform.



Maximum allowable side force		
GTWY8-2000		400 N
GTWY10-2000		400 N
GTWY12-2000		400 N
GTWY14-2000	Platform Height ≤10m	400 N
	Platform Height >10m	200 N
GTWY16-2000		200 N

Do not alter or disable machine components that in any way affect safety and stability.

Do not replace items critical to stability with items of different weight or specification. Use only Dingli authorized replacement parts.

Do not use the machine on a moving or mobile surface or vehicle.

Do not alter or disable the limit switches.

⚠ Crushing Hazard

Keep hands and limbs out of mast.

Keep hands clear when lower rails.

Do not work under the platform.

Use common sense and planning when operating the machine with the controller from the ground. Maintain safe distances between the operator, the machine and fixed objects.

⚠ Fall Hazard



The guard rail system provides fall protection.

Safety Rules

During operation, occupants in the platform must wear a full body harness with a lanyard attached to an authorized lanyard anchorage point. Attach only one (1) lanyard per lanyard anchorage point.



Do not sit, stand or climb on the platform guard rails. Maintain a firm footing on the platform floor at all times.

Do not exit the platform while raised. If a power failure occurs, have ground personnel activate the manual lowering valve.

Keep the platform floor clear of debris.

Close the entry gate before operating

⚠ Collision Hazard

Operators must comply with employer, job site and governmental rules regarding the use of personal protective equipment.

Check the work area for overhead obstructions or other possible hazards.





Be aware of crushing hazard when grasping the platform guard rail.

Do not lower the platform unless the area below is clear of personnel and obstructions.



Use common sense and planning to control the movement of the machine on or near inclines.

⚠ Component Damage Hazard

Do not use any battery or charger greater than 12V to charge the batteries.（for DC model）

Do not use the machine as a ground for welding.

⚠ Explosion and Fire Hazard

Do not operate the machine or charge the batteries in hazardous locations where potentially flammable or explosive gases or particles may be present.

⚠ Damaged Machine Hazard

Do not use a damaged or malfunctioning machine.

Conduct a thorough pre-operation inspection of the machine and test all functions before each work shift. Immediately tag and remove from service a damaged or malfunctioning machine.

Be sure all maintenance has been performed as specified in this manual.

Be sure all decals are in place and legible.

⚠ Bodily Injury Hazard

Do not operate the machine with a hydraulic oil or air leak. An air leak or hydraulic leak can penetrate and/or burn skin.

Improper contact with components under any cover will cause serious injury. Only trained maintenance personnel should access compartments. Access by the operator is only advised when performing a pre-operation inspection.

⚠ Battery Safety

⚠ Burn Hazard



Batteries contain acid. Always wear protective clothing and eye wear when working with batteries.

Avoid spilling or contacting battery acid. Neutralize battery acid spills with baking soda and water.

⚠ Explosion Hazard



Keep sparks flames and lighted tobacco away from batteries. Batteries emit explosive gas.

Do not contact the battery terminals or the cable clamps with tools that may cause sparks.

⚠ Electrocution/ Burn Hazard



Connect the battery charger to a grounded, AC 3-wire electrical outlet only.

Inspect daily for damaged cords, cables and wires. Replace damaged items before operating.

Avoid electrical shock from contact with battery terminals. Remove all rings, watches and other jewelry.

⚠ Outrigger Safety

Do not lower the outriggers unless the machine is on a firm surface. Avoid drop-offs, holes, unstable or slippery surfaces and other possible hazardous conditions.

Do not set the machine up on a surface where it cannot be leveled using only the outriggers.

Do not raise the platform unless all four outriggers are properly lowered, the footpads are in firm contact with the ground and the machine is level.

Do not adjust the outriggers while the platform is raised.

Do not move while the outriggers are lowered.

Lockout after Each Use

1 Select a safe parking location - firm level surface, clear of obstruction and traffic.

2 Lower the platform.

3 Turn the key switch to the off position and remove the key to secure from unauthorized use.

4 Push the emergency stop switch to "off" position.

5 Chock the wheels.

6 Charge the batteries.

Legend

Legend

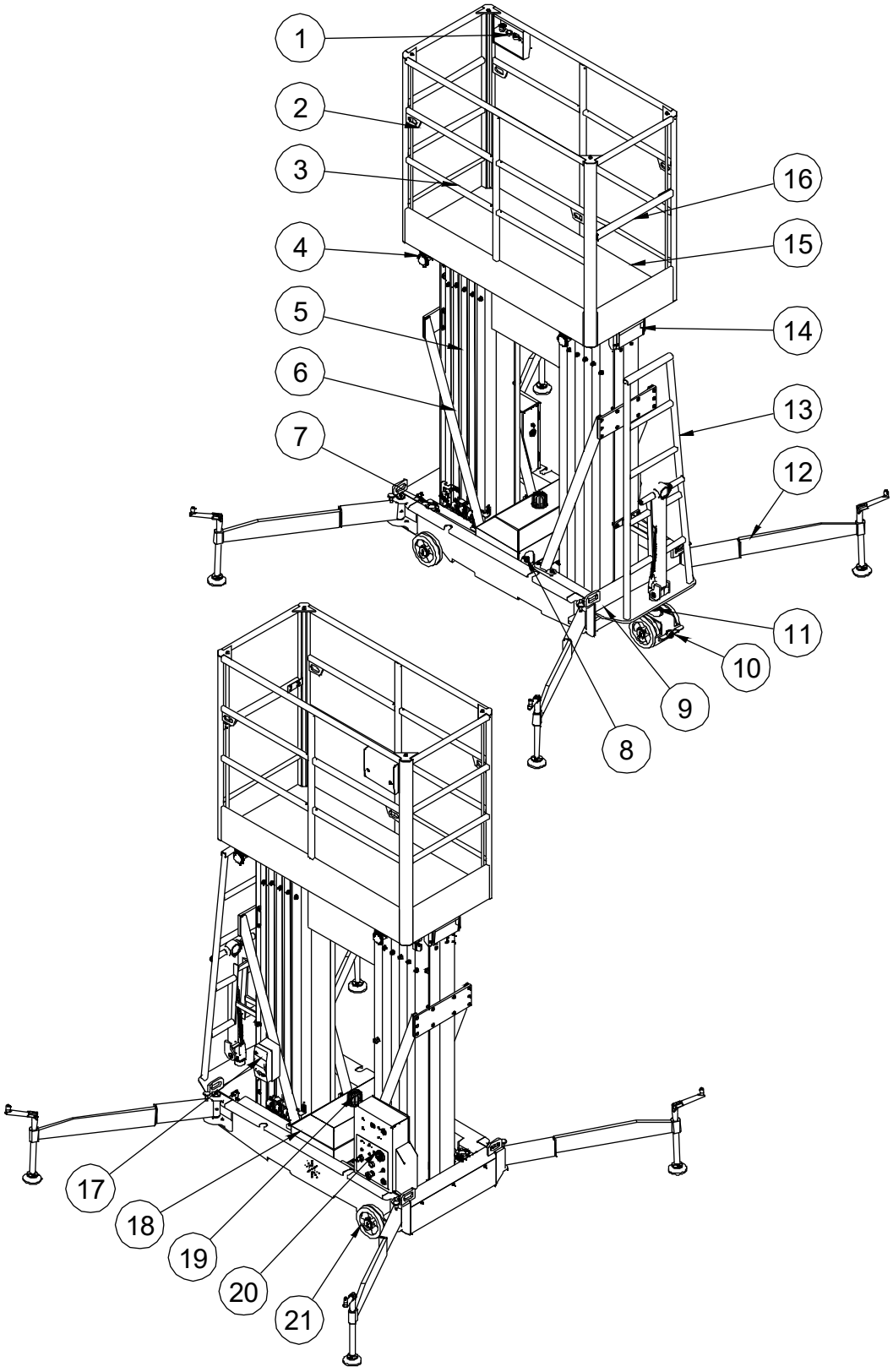

Legend

1 Platform Control

2 Lanyard anchorage point

3 Platform guard rails

4 Platform connecting Bolt

5 Masts Assembly

6 Supporting Bars

7 Tilt sensor

8 Emergency lowering knob

9 Chassis

10 Brake

11 Turning Wheel

12 Outrigger

13 Entry ladder

14 Platform Bracket

15 Platform

16 Platform entry gate

17 Circuit breaker(only for AC model)

18 Hydraulic Unit Cover

19 Beacon

20 Ground Control Box

21 Free wheel

Decals

Decal Inspection

Use the pictures on the next page to verify that all decals are legible and in place.

Below is a numerical list with quantities and descriptions.

For AC Model

No.	Part No.	Description	Qty.	Remark
1	09440011	Decal, Label-Lanyard anchorage point	4	
2	09540002	Decal, Label-IPAF	1	
3	09540001	Decal, Label-CE	1	
4	09330006	Decal, Instructions-Movable brackets operating instructions	2	
5	09430030	Decal, Warning-Tip-over hazard / Crushing hazard / Falling hazard	2	
6	09310259	Decal, Instructions-Leveling and adjustment	2	
7	09340003	Decal, Instructions-Refer the operator to the instructions for use	2	
8	09430022	Decal, Warning-High voltage power	1	
9	09430026	Decal, Warning-Crushing hazard	2	
10	09310257	Decal, Instructions-Leveling and adjustment	2	
11	09310270	Decal, Instructions- Electrical supply information	1	
12	09330008	Decal, Instructions-Installation and removal of the guardrail	4	
13	09440215	Decal, Warning-Use indoors only	2	
14	09440007	Decal, Caution-Max. manual force 400N	1	
15	09440222	Decal, Danger-Electrocution hazard	2	
16	09340016	Decal, Instructions-Open/close	1	
17	09410126	Decal, Danger-Tip-over hazard, outrigger	2	
18	09440224	Decal, Label-Capacity 300kg	1	GTWY9.5/11-2100
	09440225	Decal, Label-Capacity 250kg	1	GTWY12.5-2100
	09440226	Decal, Label-Capacity 200kg	1	GTWY14-2100
19	09310004	Decal, Instructions-Emergency lower	1	

Decals

No.	Part No.	Description	Qty.	Remark
20	09310298	Decal, Instructions-Maximum wheel load 400kg	3	
21	09310003	Decal, Instructions-Tie down point	4	
22	09310292	Decal, Instructions-Maximum outrigger load 400kg	4	
23	09420017	Decal, Danger-Do not stand	1	
24	09410124	Decal, Danger-Tip-over hazard, bubble spirit level	1	

Decals

For AC Model

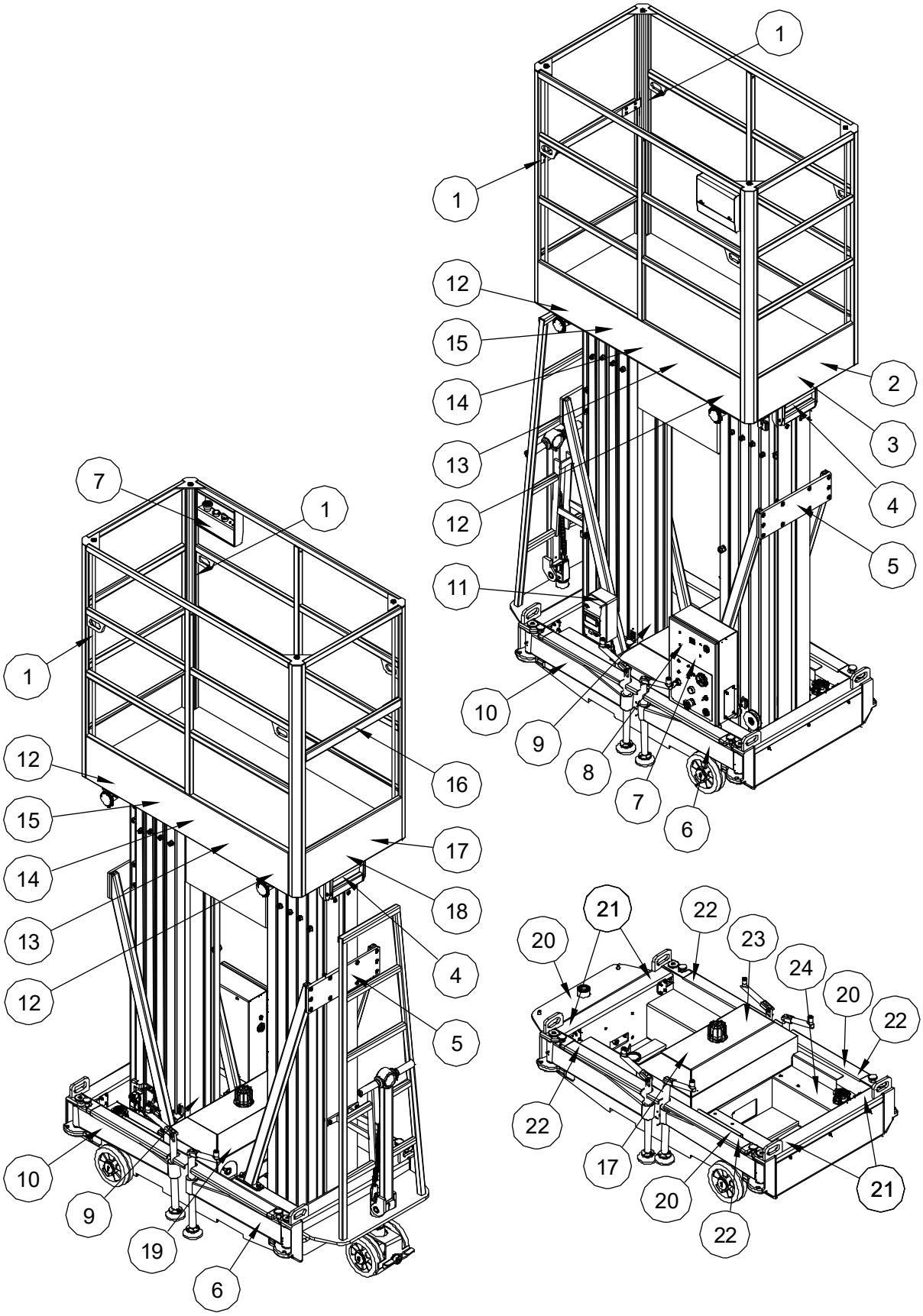

For AC Model

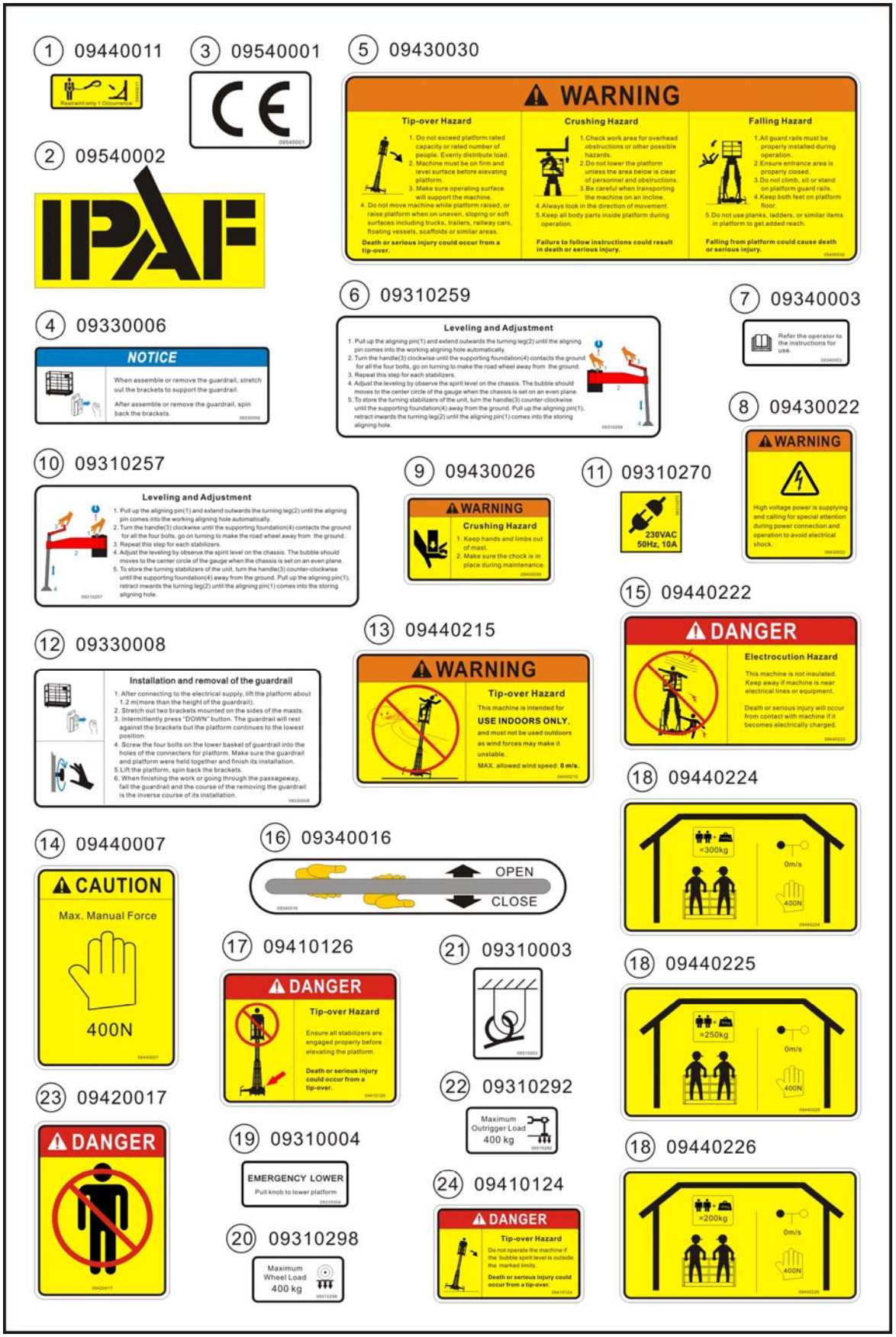
1 09440011
3 09540001
5 09430030
WARNING
Tip-over Hazard
Crushing Hazard
Falling Hazard
2 09540002
IPAF
6 09310259
Leveling and Adjustment
7 09340003
4 09330006
NOTICE
8 09430022
WARNING
10 09310257
Leveling and Adjustment
9 09430026
WARNING
Crushing Hazard
11 09310270
230VAC
50Hz, 10A
15 09440222
DANGER
Electrocution Hazard
12 09330008
Installation and removal of the guardrail
13 09440215
WARNING
Tip-over Hazard
18 09440224
≈300kg
0m/s
400N
14 09440007
CAUTION
Max. Manual Force
400N
16 09340016
OPEN
CLOSE
17 09410126
DANGER
Tip-over Hazard
21 09310003
18 09440225
≈250kg
0m/s
400N
22 09310292
Maximum
Outrigger Load
400 kg
23 09420017
DANGER
19 09310004
EMERGENCY LOWER
Pull knob to lower platform
18 09440226
≈200kg
0m/s
400N
24 09410124
DANGER
Tip-over Hazard
20 09310298
Maximum
Wheel Load
400 kg

Decals

For DC Model

No.	Part No.	Description	Qty.	Remark
1	09440011	Decal, Label-Lanyard anchorage point	4	
2	09540002	Decal, Label-IPAF	1	
3	09540001	Decal, Label-CE	1	
4	09330006	Decal, Instructions-Movable brackets operating instructions	2	
5	09430030	Decal, Warning-Tip-over hazard / Crushing hazard / Falling hazard	2	
6	09310259	Decal, Instructions-Leveling and adjustment	2	
7	09340003	Decal, Instructions-Refer the operator to the instructions for use	2	
8	09410001	Decal, Danger-Explosion/burn hazard	1	
9	09430026	Decal, Warning-Crushing hazard	2	
10	09310257	Decal, Instructions-Leveling and adjustment	2	
11	09330008	Decal, Instructions-Installation and removal of the guardrail	4	
12	09440215	Decal, Warning-Use indoors only	2	
13	09440007	Decal, Caution-Max. manual force 400N	1	
14	09440222	Decal, Danger-Electrocution hazard	2	
15	09340016	Decal, Instructions-Open/close	1	
16	09410126	Decal, Danger-Tip-over hazard, outrigger	2	
17	09440224	Decal, Label-Capacity 300kg	1	GTWY9.5/11-2100
	09440225	Decal, Label-Capacity 250kg	1	GTWY12.5-2100
	09440226	Decal, Label-Capacity 200kg	1	GTWY14-2100
18	09310004	Decal, Instructions-Emergency lower	1	
19	09310298	Decal, Instructions-Maximum wheel load 400kg	3	
20	09310003	Decal, Instructions-Tie down point	4	
21	09310292	Decal, Instructions-Maximum outrigger load 400kg	4	
22	09420017	Decal, Danger-Do not stand	1	
23	09410124	Decal, Danger-Tip-over hazard, bubble spirit level	1	

Decals

For DC Model

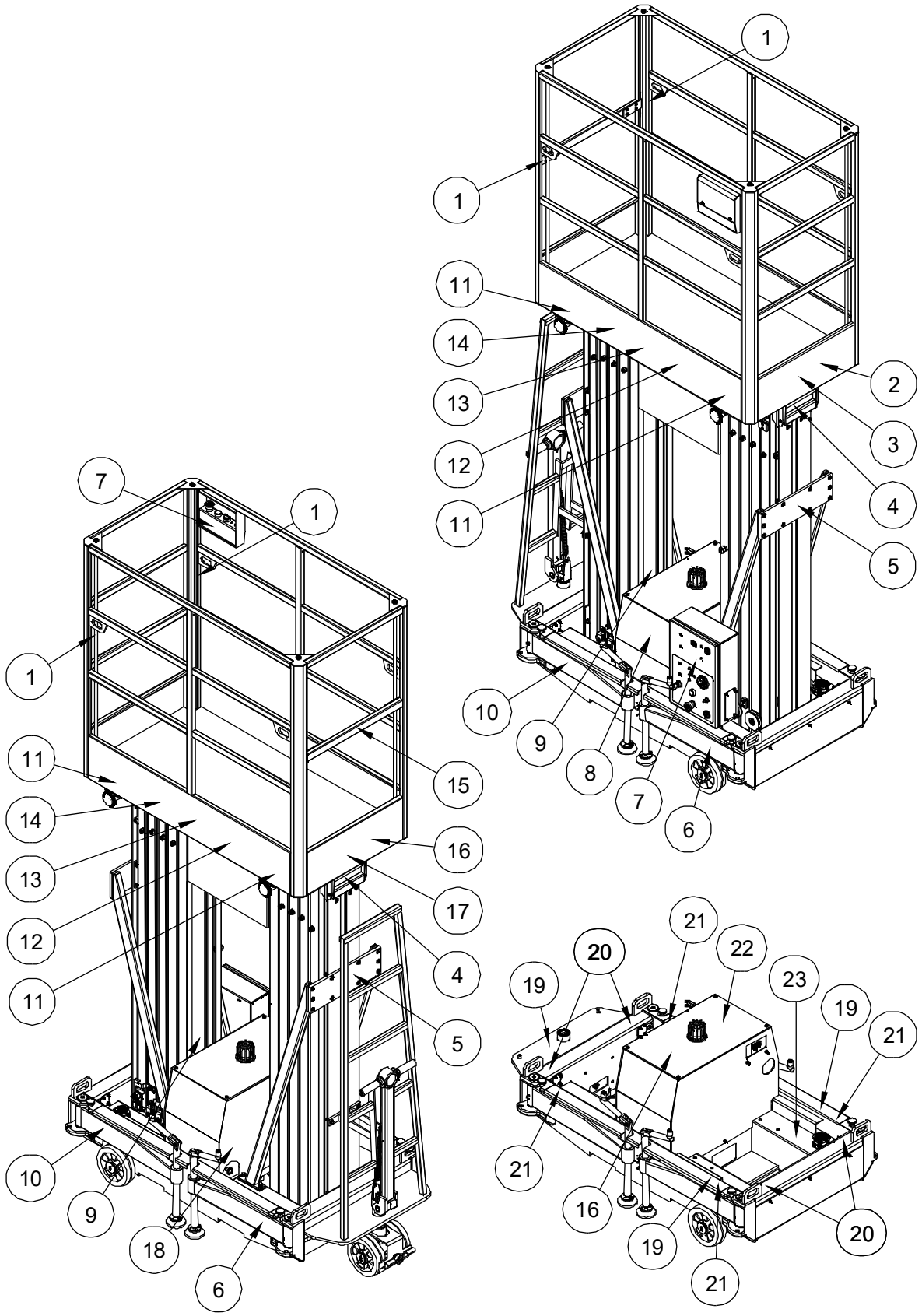

Decals

For DC Model

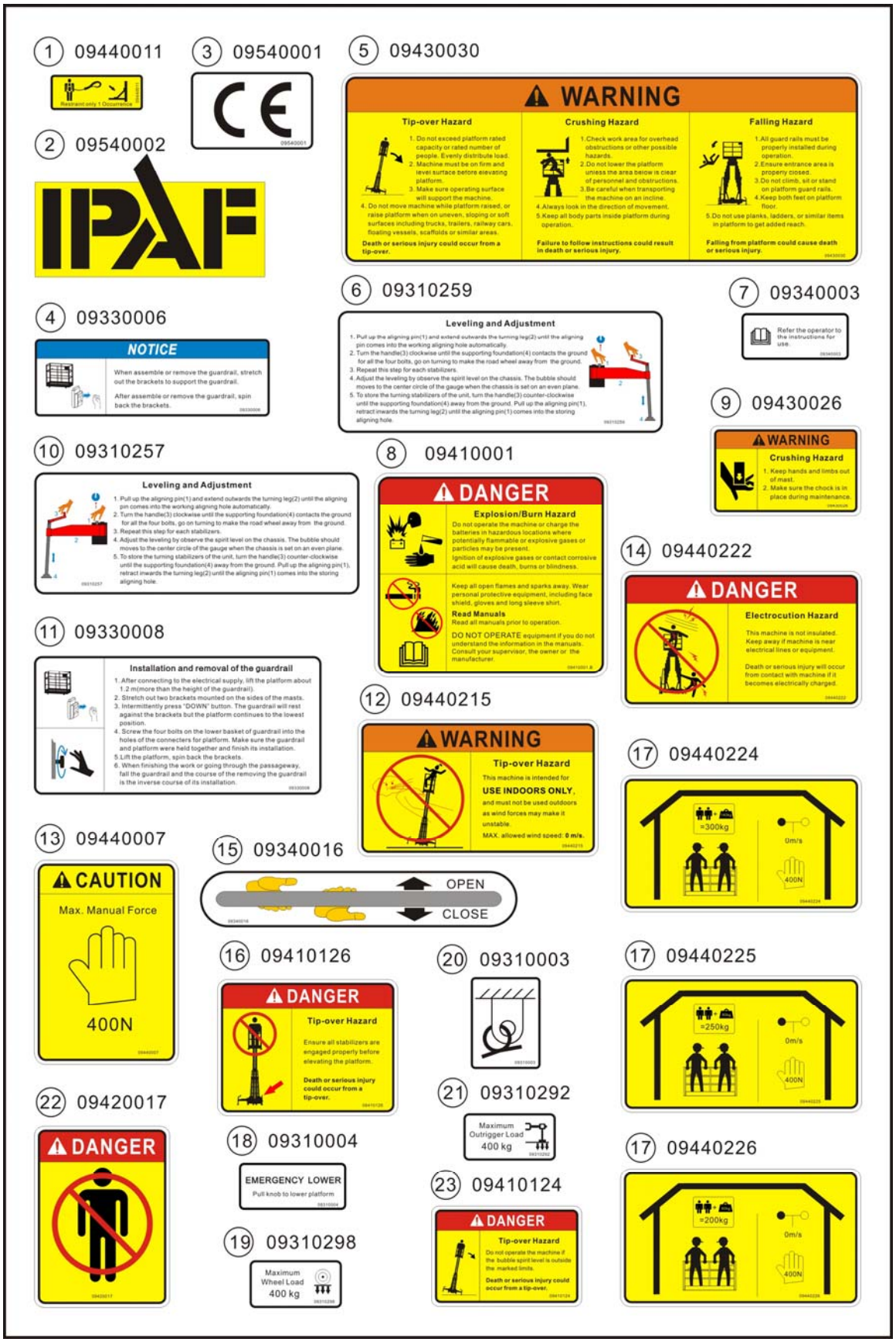

Specifications

Model: GTWY9.5-2100

Height, working maximum	9.5m
Height, platform maximum	7.5m
Height, stowed maximum	1.99m
Width	0.81m
Length, stowed	1.56m
Platform dimensions (L×W)	1.27×0.65m
Maximum load capacity,	300kg
Maximum wind speed	0m/s
Maximum working slope	0°
Outrigger footprint (L×W)	1.76×1.66m
Ground clearance	5.5cm
Weight	（See Serial Label）
Machine weights vary with option configurations.	
Lifting motor(AC)	220VAC/1.5kW
Lifting motor(DC)	12VDC/2.5kW
UP/Down speed	58/40sec
Batteries(DC)	2×12V/55Ah
Integrated charger	12V/15A
Controls	Proportional
Maximum hydraulic pressure	160bar
wheels	Φ180mm
Airborne noise emissions	＜80dB
Maximum sound level at normal operating workstations (A-weighted)	
Stabilizer load, maximum	400kg

Model: GTWY11-2100

Height, working maximum	11.0m
Height, platform maximum	9.0m
Height, stowed maximum	1.99m
Width	0.81m
Length, stowed	1.69m
Platform dimensions (L×W)	1.40×0.65m
Maximum load capacity,	300kg
Maximum wind speed	0m/s
Maximum working slope	0°
Outrigger footprint (L×W)	2.31×2.39m
Ground clearance	5.5cm
Weight	（See Serial Label）
Machine weights vary with option configurations.	
Lifting motor(AC)	220VAC/1.5kW
Lifting motor(DC)	12VDC/2.5kW
UP/Down speed	64/44sec
Batteries	2×12V/55Ah
Integrated charger	12V/15A
Controls	Proportional
Maximum hydraulic pressure	160bar
wheels	Φ180mm
Airborne noise emissions	＜80dB
Maximum sound level at normal operating workstations (A-weighted)	
Stabilizer load, maximum	400kg

Note: Floor loading information is approximate and does not incorporate different option configurations. It should be used only with adequate safety factors.

Continuous improvement of our products is a DINGLI policy. Product specifications are subject to change without notice or obligation.

Specifications

Model: GTWY12.5-2100

Height, working maximum	12.50m
Height, platform maximum	10.50m
Height, stowed maximum	1.99m
Width	0.81m
Length, stowed	1.69m
Platform dimensions (L×W)	1.40×0.65m
Maximum load capacity,	250kg
Maximum wind speed	0m/s
Maximum working slope	0°
Outrigger footprint(L×W)	2.31×2.39m
Ground clearance	5.5cm
Weight	（See Serial Label）
Machine weights vary with option configurations.	
Lifting motor(AC)	220VAC/1.5kW
Lifting motor(DC)	12VDC/2.5kW
UP/Down speed	74/44sec
Batteries	2×12V/55Ah
Integrated charger	12V/15A
Controls	Proportional
Maximum hydraulic pressure	160bar
wheels	Φ180mm
Airborne noise emissions	＜80dB
Maximum sound level at normal operating workstations (A-weighted)	
Stabilizer load, maximum	400kg

Model: GTWY14-2100

Height, working maximum	14.00m
Height, platform maximum	12.00m
Height, stowed maximum	2.37m
Width	0.81m
Length, stowed	1.69m
Platform dimensions (L×W)	1.40×0.65m
Maximum load capacity,	200kg
Maximum wind speed	0m/s
Maximum working slope	0°
Outrigger footprint(L×W)	2.31×2.39m
Ground clearance	5.5cm
Weight	（See Serial Label）
Machine weights vary with option configurations.	
Lifting motor(AC)	220VAC/1.5kW
Lifting motor(DC)	12VDC/2.5kW
UP/Down speed	76/47sec
Batteries	2×12V/55Ah
Integrated charger	12V/15A
Controls	Proportional
Maximum hydraulic pressure	160bar
Tire Back wheels	Φ180mm
Airborne noise emissions	＜80dB
Maximum sound level at normal operating workstations (A-weighted)	
Stabilizer load, maximum	400kg

Note: Floor loading information is approximate and does not incorporate different option configurations. It should be used only with adequate safety factors.

Continuous improvement of our products is a DINGLI policy. Product specifications are subject to change without notice or obligation.

Ground Control Panel

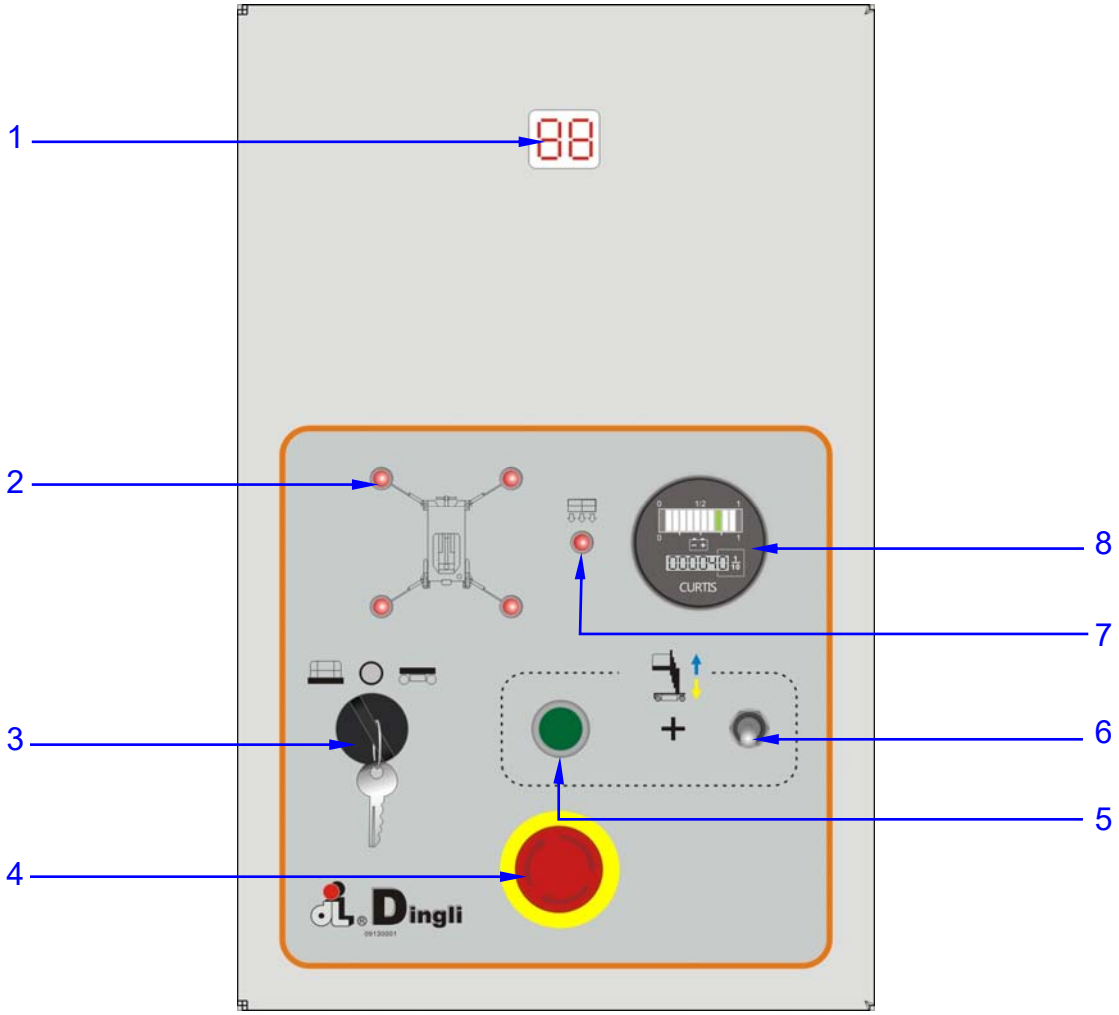

1 LED readout screen

Display fault code.

Display battery capacity (DC model)

2 Outrigger interlock indicator lights (four)

3 Key switch

Turn the key switch to the Platform position and the platform controls will be activated.

Turn the key switch to the OFF position to cut off the power.

Turn the key switch to the Chassis position and the Ground controls will be activated.

4 Red Emergency Stop button

Push in the red Emergency Stop button to the off position to stop all functions.

Turn the red Emergency Stop button clockwise to the on position to operate the machine.

5 Function enable button

6 Platform up/down switch

7 Overload indicator light

8 Hour meter

Control Panel

Platform Control Panel

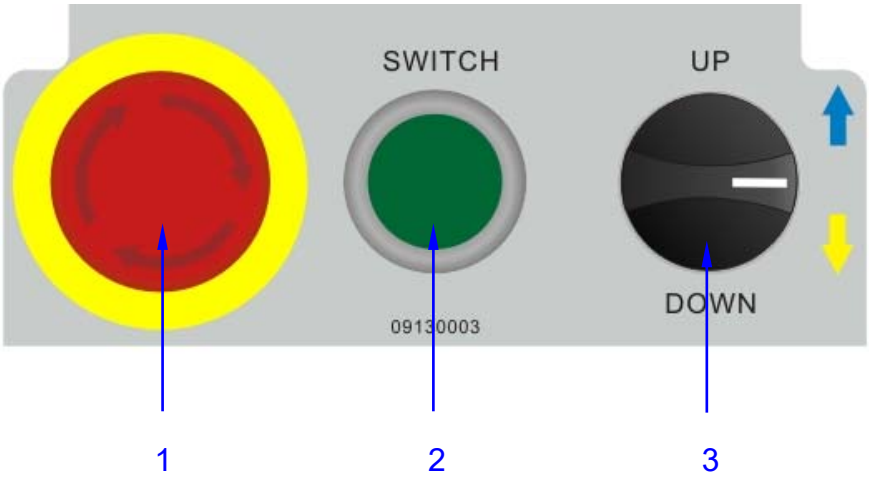

1 Red Emergency Stop button

Push in the red Emergency Stop button to the off position to stop all functions.

Turn the red Emergency Stop button clockwise to the on position to operate the machine.

2 Function enable button

3 Platform up/down switch

Pre-operation Inspection



Do Not Operate Unless:

☑ You learn and practice the principles of safe machine operation contained in this operator's manual.

1 Avoid hazardous situations.

2 Always perform a pre-operation inspection.

Know and understand the pre-operation inspection before going on to the next section.

3 Inspect the workplace.

4 Always perform function tests prior to use.

5 Only use the machine as it was intended.

Fundamentals

It is the responsibility of the operator to perform a pre-operation inspection and routine maintenance.

The pre-operation inspection is a visual inspection performed by the operator prior to each work shift.

The inspection is designed to discover if anything is apparently wrong with a machine before the operator performs the function tests.

The pre-operation inspection also serves to determine if routine maintenance procedures are required. Only routine maintenance items specified in this manual may be performed by the operator.

If damage or any unauthorized variation from factory delivered condition is discovered, the machine must be tagged and removed from service.

Repairs to the machine may only be made by a qualified service technician, according to the manufacturer's specifications. After repairs are completed, the operator must perform a pre-operation inspection again before going on to the function tests.

Scheduled maintenance inspections shall be performed by qualified service technicians, according to the manufacturer's specifications and the requirements listed in the manual.

Pre-operation Inspection

The relevant conditions of using the equipment

- ☐ The surface of work ground should be flat and hard with no obstacles in air and the safety distance between the equipment and high-tension line is adequate.
- ☐ The environment temperature should be within -10℃~38℃; Height above sea level ≤1000m.
- ☐ The environment humidity≤90%.
- ☐ Electrical power: AC 220V±10%, 50Hz.

Pre-operation Inspection

Before you begin your workday, you must inspect your machine and report all deficiencies. Do not operate the machine until deficiencies are corrected and all systems are in good operational condition

- ☐ Make sure that the operator's manuals are complete, legible.
- ☐ Make sure that all decals are legible and in place. See Decals section.
- ☐ Check for battery fluid leaks and proper fluid level. Add distilled water if needed. See Maintenance section. (DC models)
- ☐ Check for hydraulic oil leaks and proper oil level. Add oil if needed. See Maintenance section.

Check the following components or areas for damage, improperly installed or missing parts and unauthorized modifications:

- ☐ Electrical components, wiring and electrical cables
- ☐ Hydraulic hoses, fittings, cylinders and manifolds
- ☐ Fuel and hydraulic tanks
- ☐ Breather cap
- ☐ Emergency lowering knob
- ☐ Tires and wheels
- ☐ Limit switch
- ☐ Nuts, bolts and other fasteners，especially the screws and nuts on both sides of the masts.
- ☐ Platform entry gate
- ☐ alarms
- ☐ Platform connecting Bolt
- ☐ Outrigger
- ☐ Sequencing cables and pulleys
- ☐ Wire rope assembly
- ☐ Lifting chains and idler wheels
- ☐ Mast columns

Check entire machine for:

- ☐ Dents or damage
- ☐ Corrosion or oxidation
- ☐ Cracks in welds or structural components
- ☐ Inspect and clean battery terminals and all battery cable connections (DC models)
- ☐ Make sure that all structural and other critical components are present and all associated
- ☐ Perform necessary maintenance procedure outlined by the manufacture

Workplace Inspection



Do Not Operate Unless:

☑ You learn and practice the principles of safe machine operation contained in this operator's manual.

1 Avoid hazardous situations.

2 Always perform a pre-operation inspection.

3 Inspect the workplace.

Know and understand the workplace inspection before going on to the next section.

4 Always perform function tests prior to use.

5 Only use the machine as it was intended.

Fundamentals

The workplace inspection helps the operator determine if the workplace is suitable for safe machine operation. It should be performed by the operator prior to moving the machine to the workplace.

It is the operator's responsibility to read and remember the workplace hazards, then watch for and avoid them while moving, setting up and operating the machine.

Workplace Inspection

Be aware of and avoid the following hazardous situations:

- Drop-offs or holes
- Bumps, floor obstructions or debris
- Sloped surfaces
- Unstable or slippery surfaces
- Overhead obstructions and high voltage conductors
- Hazardous locations
- Inadequate surface support to withstand all load forces imposed by the machine
- The presence of unauthorized personnel
- Other possible unsafe conditions

Function Tests



Do Not Operate Unless:

☑ You learn and practice the principles of safe machine operation contained in this operator's manual.

1 Avoid hazardous situations.

2 Always perform a pre-operation inspection.

3 Inspect the workplace.

4 Always perform function tests prior to use.

Know and understand the function tests before going on to the next section.

5 Only use the machine as it was intended.

Fundamentals

The function tests are designed to discover any malfunctions before the machine is put into service.

The operator must follow the step-by-step instructions to test all machine functions.

A malfunctioning machine must never be used. If malfunctions are discovered, the machine must be tagged and removed from service. Repairs to the machine may only be made by a qualified service technician, according to the manufacturer's specifications.

After repairs are completed, the operator must perform a pre-operation inspection and function tests again before putting the machine into service.

Function Tests

Setup

1 Position the machine on a firm surface below the desired work area directly.

2 Connect to the appropriate power source: DC models: Connect the battery pack. AC models: Connect to a grounded 15A AC power supply. Use a 2.5mm^2 3-wire grounded extension cords no longer than 50 feet / 13 m. The power light is on.

3 Turn the circuit breaker on.(Only for AC models)

AC models: The LED indicator light should come on.

4 Insert the key and turn to ground control or platform control as you want.

5 Leveling the whole equipment. (see Operating Instructions)

At the Ground Controls

6 Turn the red Emergency Stop button clockwise to the on position at both the ground and platform controls.

7 Turn the key switch to the ground control.

⊙ Result: The LED indicator light should come on.

Test Emergency Stop

8 Push in the ground red Emergency Stop button to the off position.

⊙ Result: No functions should operate.

9 Turn the red Emergency Stop button clockwise to the on position.

⊙ Result: The LED indicator light should come on.

Test Function Enable and Up/Down Functions

10 Do not press the function enable button, Move up and hold the platform up/down switch.

⊙ Result: The platform should not rise.

11 Do not press the function enable button, Move down and hold the platform up/down switch.

⊙ Result: The platform should not lower.

12 Press and hold the function enable button, Move up and hold the platform up/down switch.

⊙ Result: The platform should rise. The descent alarm should sound.

13 Press and hold the function enable button, Move down and hold the platform up/down switch.

⊙ Result: The platform should lower. The descent alarm should sound.

Test the Emergency Lowering

14 Raise the platform approximately 60 cm.

15 Pull out the emergency lowering knob.

⊙ Result: The platform should lower. The descent alarm will not sound.

16 Turn the key switch to platform control.

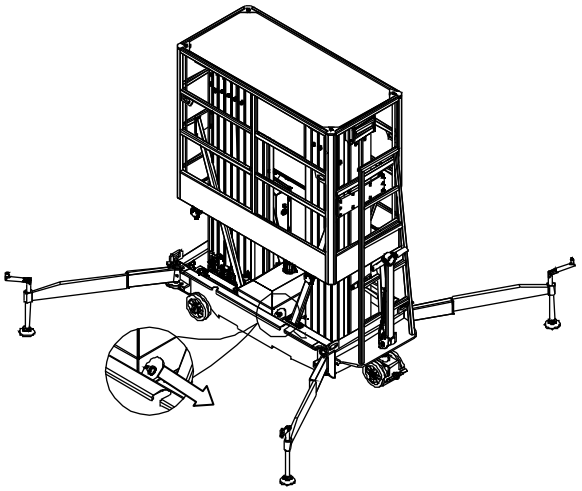

Function Tests

Test the Avoid Pinching Hand Function

17 Raise the platform 1m at least.

18 Press and hold the function enable button, Move down and hold the platform up/down switch.

⊙ Result: The platform lows to a certain height.

19 Release the function enable button and the platform up/down switch.

20 Press and hold the function enable button, Move down and hold the platform up/down switch.

⊙ Result: the descent alarm should sound, sound frequency becomes rapid , 3s later, the platform lows again.

Test the Up Limit Switch

21 Press and hold the function enable button, turn up and hold the up/down switch.

22 While raising the platform from the ground controls, push in the roller of the up limit switch to activate the limit switch.

⊙ Result: The platform stops raising.

Test the Tilt Sensor Operation

23 Adjust the leveling jack until the tilt sensor indicator turn red.

⊙ Result: The up function should not operate.

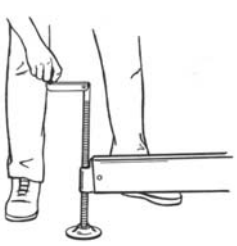

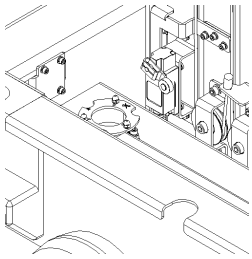

24 Adjust the leveling jack until the tilt sensor indicator turn green.

⊙ Result: The up function should operate normally.

Test Outrigger Interlock

25 Unscrew one leveling jack until the corresponding interlock indicator light turns off.

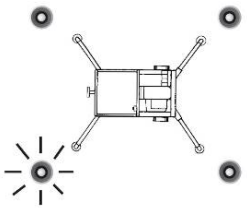

⊙ Result: The up function should not operate, LED screen display "-L".

Return the leveling jack to the previous setting and check the bubble level. Repeat this procedure for each outrigger.

At the Platform Controls

Test Emergency Stop

26 Push in the platform red Emergency Stop button to the off position.

⊙ Result: No functions should operate.

27 Turn the red Emergency Stop button clockwise to the on position.

⊙ Result: The LED indicator light should come on.

Test Function Enable and Up/Down Functions

28 Do not press the function enable button, turn up and hold the platform up/down switch.

⊙ Result: The platform should not rise.

29 Do not press the function enable button, turn down and hold the platform up/down switch.

⊙ Result: The platform should not lower.

30 Press and hold the function enable button, turn up and hold the platform up/down switch.

⊙ Result: The platform should rise. The

descent alarm should sound.

31 Press and hold the function enable button, turn down and hold the platform up/down switch.

⊙ Result: The platform should lower. The descent alarm should sound.

Operating Instructions



Do Not Operate Unless:

☑ You learn and practice the principles of safe machine operation contained in this operator's manual.

1 Avoid hazardous situations.

2 Always perform a pre-operation inspection.

3 Inspect the workplace.

4 Always perform function tests prior to use.

5 Only use the machine as it was intended.

Fundamentals

This machine is a mobile hydraulic lift equipped with a work platform on the Vertical mechanism. Vibrations emitted by these machines are not hazardous to an operator in the work platform. The machine can be used to position personnel with their tools and supplies at position above ground level and can be used to reach work areas located above and over machinery or equipment.

A full and detailed implementation of EN ISO 13849-1/2 is correctly applied on our MEWP design. SISTEMA, a software tool for PL Calculation Tool, is also used to perform some relatively straightforward calculations on subsystem to determine the overall PL of the system. Reliability data, diagnostic coverage [DC], the system architecture [Category], common cause failure and, where relevant, requirements for software are used to assess the PL to comply with PLr of SRP/CS in Clause 5.11 of EN 280.

The Operating Instructions section provides instructions for each aspect of machine operation.

It is the operator's responsibility to follow all the safety rules and instructions in the operator's manual.

Using the machine for anything other than lifting personnel, along with their tools and materials, to an aerial work site is unsafe and dangerous.

Only trained and authorized personnel should be permitted to operate a machine. If more than one operator is expected to use a machine at different times in the same work shift, they must all be qualified operators and are all expected to follow all safety rules and instructions in the operator's manual. That means every new operator should perform a pre-operation inspection, function tests, and a workplace inspection before using the machine.

Inspection on Opening the Packaging

For the initial use, most users should remove the outer packing of wood box for equipment, shockproof and knock-preventing packing before using the equipment, Even if without outer packing, check the whole equipment and its accessories, and the equipment includes the following parts.

Dustproof Cover



operator's manual

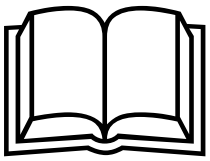

Certificate of Quality



NOTICE

1 If the unit has been damaged during transport, it must not be put into service, and you should immediately contact your dealer.

2 The equipment has been lubricated before delivery, and the hydraulic unit has been filled with hydraulic oil.

3 If a battery has been supplied with the machine, the battery is charged.

Area Needed for Set up the Machine

1 The area for machine stabilizer footprint shown as the sketch below:

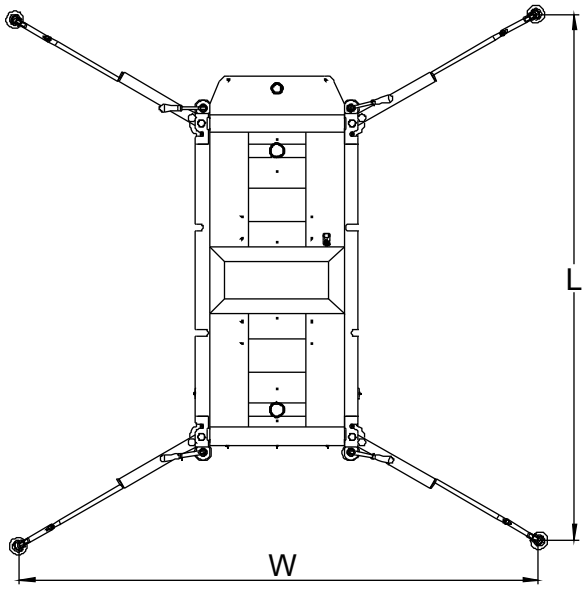

Item	model	L	W
		mm	mm
1	GTWY9.5-2100	1760	1660
2	GTWY11-2100	2310	2390
3	GTWY12.5-2100	2310	2390
4	GTWY14-2100	2310	2390

2 There are horizontal forces including operating force etc. on the platform. If excessive, render the platform unstable. Preventing inclination of the unit is achieved by extending the four turning stabilizers, which are connected to the four corners of the chassis. Supporting and leveling the unit is achieved by adjusting the support bolts of the four turning stabilizers.

Operating Instructions

The sketch below shows the following parts:

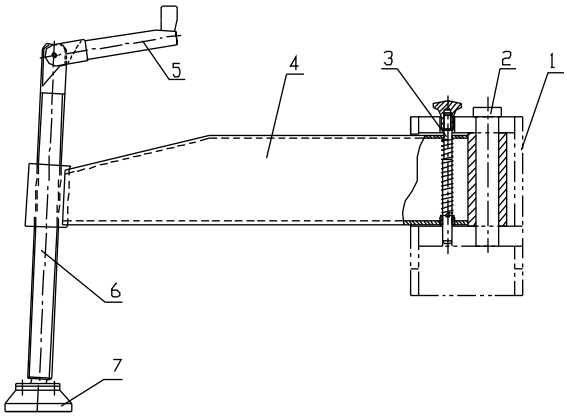

1 Chassis 2 Axle Pin
3 Aligning Pin 4 Turning Leg
5 Handle 6 Supporting Bolt
7 Supporting Foundation

Leveling the whole equipment

1 Pull up the aligning pin, extend outwards the turning leg, which is connected to one of the four corners of the chassis, until the aligning pin gets into the working aligning hole automatically.

2 Turn the handle clockwise to raise the wheel slightly off the ground. Check the outrigger interlock indicator light at the ground control. Confirm that the corresponding light is on.

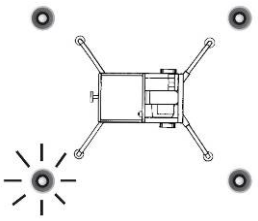

3 Repeat this procedure for each of the remaining outriggers.

4 Adjust the handle by observing the bubble position of the tilt sensor until the tilt sensor indicator turn green, then the chassis is level.

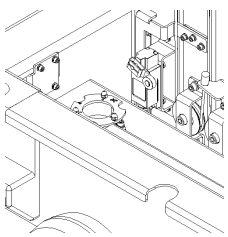

5 Follow the instruction but in reverse order to return the outrigger to stowed position.

⚠WARNING If adjustment is necessary, check the tilt sensor and outrigger indicator light again to make sure the machine is level and all four outrigger indicator light are on.

⚠WARNING The up function should not operate unless all four outriggers are properly lowered, the footpads are in firm contact with the ground and the machine is level.

How to use the control buttons

Emergency Stop

Push in the red Emergency Stop button at the platform controls or at the ground controls to stop the up/down function.

Platform Raise and Lower

1 Twist to release the Emergency Stop button to the on positions at the platform controls and at the ground controls.

2 Turn the key switch to platform control or ground control.

3 You could move the platform by push in the up/down switch and function enable button at ground control in the direction of intended travel. (Turn the key switch to ground control)

4 You can also move the platform by Push in the control activate button and rotate the up/down switch at platform control in the direction of intended travel. (Turn the key switch to platform control)

Installation and removal of the guardrail

The guardrail of platform is movable. During transportation or passing narrow passages, make the whole guardrail fall till it doesn't take up the height space. The following figure shows the guardrail and its installation.

Steps of installation

1 After connecting to the power supply, lift the platform and guardrail up together about 1.2 m. (higher than guardrail height).

2 Stretch outwards the two movable brackets mounted on the sides of the masts.

3 Intermittently press the platform down button. The guardrail will rest against the movable brackets but the platform continues to fall down to the bottom. The guardrail is in the working position.

4 Turn the four connecting bolts on the lower basket of the guardrail into the connecters of the platform. Make sure the guardrail and the platform were held together and finish its installation.

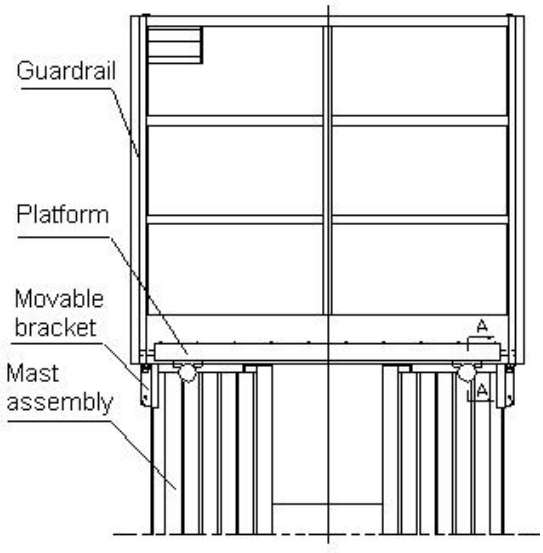

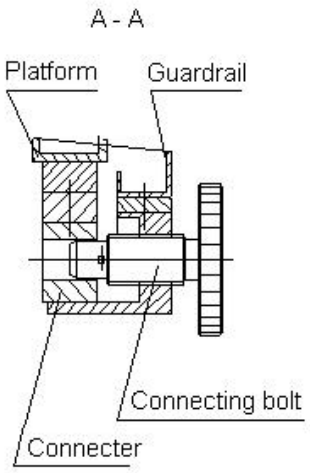

Emergency Operation

If two sets of the upper and the lower control devices can't make the platform fall because of sudden power failure or other causes, pull the knob and the platform will be lowered slowly.

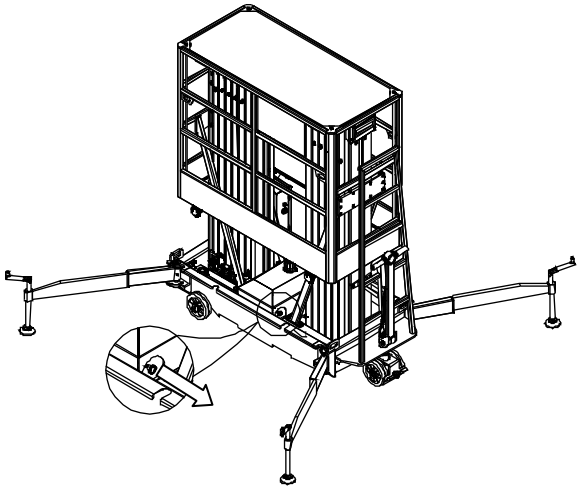

Operating Instructions



Battery and Charger Instructions

Observe and Obey:

☑ Do not use an external charger or booster battery.

☑ Charge the battery in a well-ventilated area.

☑ Use proper AC input voltage for charging as indicated on the charger.

☑ Use only a Dingli authorized battery and charger.

To Charge Battery

1 Be sure the batteries are connected before charging the batteries.

Maintenance - free batteries

2 Connect the battery charger to a grounded AC circuit.

3 The charger will indicate when the battery is fully charged.

Standard Batteries

4 Remove the battery vent caps and check the battery acid level. If necessary, add only enough distilled water to cover the plates. Do not overfill prior to the charge cycle.

5 Replace the battery vent caps.

6 Connect the battery charger to a grounded AC circuit.

7 The charger will indicate when the battery is fully charged.

8 Check the battery acid level when the charging cycle is complete. Replenish with distilled water to the bottom of the fill tube. Do not overfill.

Dry Battery Filling and Charging Instructions

1 Remove the battery vent caps and permanently remove the plastic seal from the battery vent openings.

2 Fill each cell with battery acid (electrolyte) until the level is sufficient to cover the plates.

Do not fill to maximum level until the battery charge cycle is complete. Overfilling can cause the battery acid to overflow during charging. Neutralize battery acid spills with baking soda and water.

3 Install the battery vent caps.

4 Charge the battery.

5 Check the battery acid level when the charging cycle is complete. Replenish with distilled water to the bottom of the fill tube. Do not overfill.

Note: These parts are applicable to DC models, not to AC models.

Transport and Storage Instructions



Transport Instructions

Observe and Obey:

☑ The transport vehicle must be parked on a level surface.

☑ The transport vehicle must be secured to prevent rolling while the machine is being loaded.

☑ Be sure the vehicle capacity, loading surfaces and chains or straps are sufficient to withstand the machine weight. See the serial label for the machine weight.

☑ The machine must be on a level surface or secured before releasing the brakes.

Moving the equipment

1 The platform should fall down to the bottom when you are moving the equipment to other working places and then retract the turning stabilizers. The supporting foundations should be made away from the ground and then push the whole machine to the destination. If the equipment goes across the uneven ground, the supporting foundations should be away from the ground so far as to prevent the bolt from bending by the obstacles.

2 If the platform is carried in a long distance, other loading tools should be used for transportation. A forklift should be used for loading onto other vehicles. It should be lifted upward from the bottom. The sketch below shows the lifting points and method of loading.

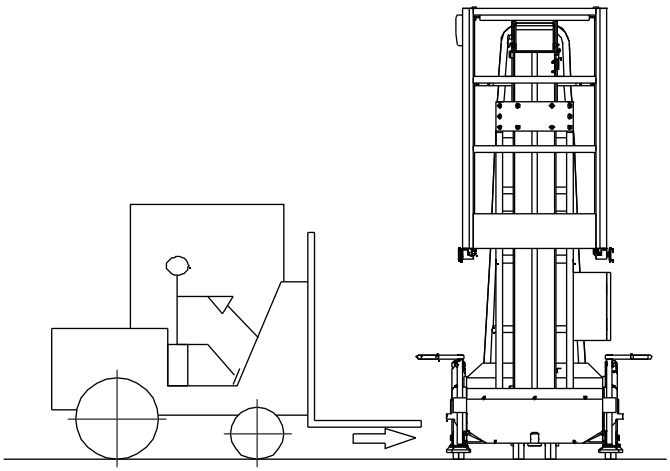

NOTICE Pull the plug of the power supply out of the socket when you move the whole equipment, cut off the power supply to avoid any unnecessary accidents.

Transport and Storage Instructions

Securing to Truck or Trailer for Transit

Turn the key switch to the off position and Remove the key before transporting.

Use the tie-down points on the chassis for anchoring down to the transport surface.

Use a minimum of four chains or straps.

Use chains or straps of ample load capacity.

Inspect the entire machine for loose or unsecured items.

Storage of the equipment

If you plan to stop using the equipment for a long time, the unit should be cleaned and protected by a dustproof cover.

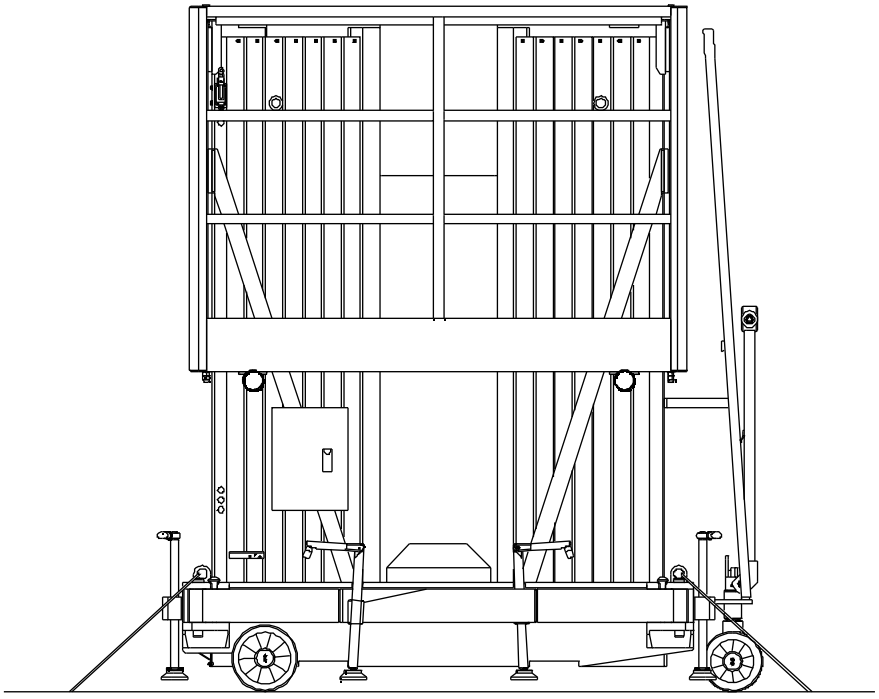

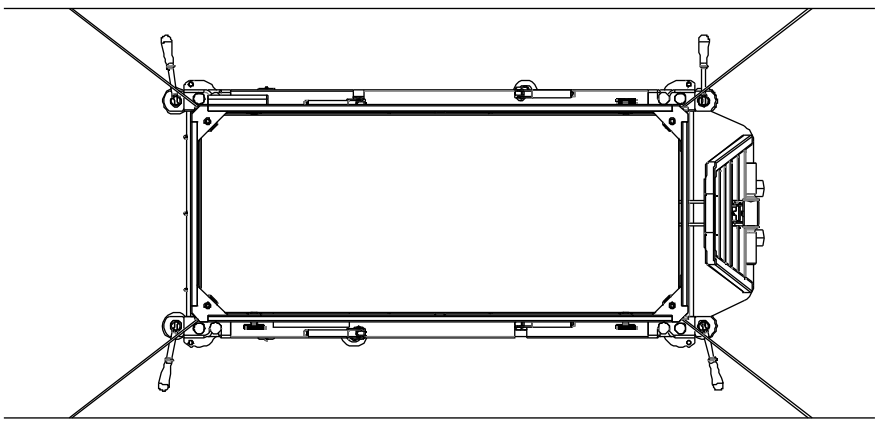



Observe and Obey:

☑ Only routine maintenance items specified in this manual shall be performed by the operator.

☑ Scheduled maintenance inspections shall be completed by qualified service technicians, according to the manufacturer's specifications and the requirements specified in this manual.

Maintenance Symbols Legend

NOTICE The following symbols have been used in this manual to help communicate the intent of the instructions. When one or more of the symbols appear at the beginning of a maintenance procedure, it conveys the meaning below.

 Indicates that tools will be required to perform this procedure.

 Indicates that new parts will be required to perform this procedure.

 Indicates that dealer service will be required to perform this procedure.

Pre-delivery Preparation Report

The pre-delivery preparation report contains checklists for each type of scheduled inspection.

Make copies of the Pre-delivery Preparation report to use for each inspection. Store completed forms as required.

Maintenance Schedule

There are three types of maintenance inspections that must be performed according to a schedule — daily, quarterly, annually, The Scheduled Maintenance Procedures Section and the Maintenance Inspection Report have been divided into five subsections—A, B, and C, Use the following chart to determine which group(s) of procedures are required to perform a scheduled inspection.

Inspection	Checklist
Daily	A
Quarterly	A+B
Annually	A+B+C

Maintenance Inspection Report

The maintenance inspection report contains checklists for each type of scheduled inspection.

Make copies of the Maintenance Inspection Report to use for each inspection. Maintain completed forms for a minimum of 3 years or in compliance with your employer, jobsite and governmental regulations and requirements.

Maintenance

Pre-delivery Preparation Report

Fundamentals

It is the responsibility of the dealer to perform the Pre-delivery Preparation.

The Pre-delivery Preparation is performed prior to each delivery. The inspection is designed to discover if anything is apparently wrong with a machine before it is put into service.

A damaged or modified machine must never be used. If damage or any variation from factory delivered condition is discovered, the machine must be tagged and removed from service.

Repairs to the machine may only be made by a qualified service technician, according to the manufacturer's specifications.

Scheduled maintenance inspections shall be performed by qualified service technicians, according to the manufacturer's specifications and the requirements listed in this manual.

Instructions

Use the operator's manual on your machine.

The Pre-delivery Preparation consists of completing the Pre-operation Inspection, the Maintenance items and the Function Tests.

Use this form to record the results. Place a check in the appropriate box after each part is completed. Follow the instructions in the operator's manual.

If any inspection receives an N, remove the machine from service, repair and re-inspect it. After repair, place a check in the R box.

Legend

Y = yes, completed

N = no, unable to complete

R = repaired

Comments

Pre-Delivery Preparation	**Y**	**N**	**R**
Pre-operation inspection completed			
Maintenance items completed			
Function tests completed			

Model
Serial number
Date
Machine owner
Inspected by (print)
Inspector signature
Inspector title
Inspector company

Maintenance Inspection Report

Model
Serial number
Date
Machine owner
Inspected by (print)
Inspector signature
Inspector title
Inspector company

Instructions

• Make copies of this report to use for each inspection.

• Select the appropriate checklist(s) for the type of inspection to be performed.

☐ Daily	A
☐ Quarterly	A+ B
☐ Annually	A+B+C

• Place a check in the appropriate box after each inspection procedure is completed.

• Use the step-by-step procedures in this section to learn how to perform these inspections.

• If any inspection receives an "N", tag and remove the machine from service, repair and re-inspect it. After repair, place a check in the "R' box.

Legend

Y = yes, acceptable
N = no, remove from service
R = repaired

Checklist A	**Y**	**N**	**R**
A-1 Inspect the manuals and decals			
A-2 Inspect for Damage and Loose or Missing Parts			
A-3 Check for Hydraulic Leaks			
A-4 Check the Hydraulic Oil Level			
A-5 Check the Platform Manual Lowering Operation			
A-6 Check the Sequencing Cables			
A-7 Check the Interlock System for Proper Operation			
A-8 Perform Function tests			
A-9 Inspect the Lifting Chains and Idler Wheels			

Checklist B	**Y**	**N**	**R**
B-1 Inspect the Electrical wiring			
B-2 Inspect All Welds			
B-3 Check the Lifting Chain Adjustment			
B-4 Inspect the Battery (DC Models)			
B-5 Clean and Lubricate the Chains and Masts			
B-6 Test the Lifting Capacity			
B-7 Test the Up Limit Switch			
B-8 Test the Down Limit Switch			

Checklist C	**Y**	**N**	**R**
C-1 Inspect and Lubricate the Casters			
C-2 Replace the Hydraulic oil			

Maintenance

Checklist A Procedures

A-1

Inspect the Manuals and Decals

Maintaining the operator's manual in good condition is essential to safe machine operation. Manuals are included with each machine and should be stored in the container provided. An illegible or missing manual will not provide safety and operational information necessary for a safe operating condition.

In addition, maintaining all of the safety and instructional decals in good condition is mandatory for safe machine operation. Decals alert operators and personnel to the many possible hazards associated with using this machine. They also provide users with operation and maintenance information. An illegible decal will fail to alert personnel of a procedure or hazard and could result in unsafe operating conditions.

1 Examine the pages of manual to be sure that they are legible and in good condition.

☉ Result: The operator manual is appropriate for the machine and the manual are legible and in good condition.

☒ Result: The operator's manual is not appropriate for the machine or the manual is not in good condition or is illegible. Remove the machine from service until the manual is replaced.

2 Open the operator's manual to the decals inspection section. Carefully and thoroughly inspect all decals on the machine for legibility and damage.

☉ Result: The machine is equipped with all required decals, and all decals are legible and in good condition.

☒ Result: The machine is not equipped with all required decals, or one or more decals are illegible or in poor condition. Remove the machine from service until the decals are replaced.

3 Always return the manual to the storage container after use.

Note: Contact your authorized DINGLI distributor or DINGLI Industries if replacement manuals or decals are needed.

A-2

Inspect for Damage and Loose or Missing Parts



Daily machine condition inspections are essential to safe machine operation and good machine performance. Failure to locate and repair damage, and discover loose or missing parts may result in an unsafe operating condition.

Inspect the entire machine for damage and improperly installed or missing parts including:

- Electrical components and wiring
- Hydraulic power unit, hoses, fittings and cylinders
- Manual lowering lever and components
- Platform end guard rail, Platform Bracket and platform entry gate
- Platform connecting Bolt
- Sequencing cables and pulleys
- Lifting chains and idler wheels
- Nuts, bolts and other fasteners
- Mast and mast braces
- Breather cap
- Outriggers, tilt sensor and footpads
- Platform entry ladder
- Dents or damage to machine
- Corrosion or oxidation
- Cracks in welds or structural components

A-3

Check for Hydraulic Leaks



Detecting hydraulic fluid leaks is essential to operational safety and good machine performance.

Undiscovered leaks can develop into hazardous conditions, impair machine functions and damage machine components.

Inspect for hydraulic oil puddles, dripping or residue on or around the following areas:

- Hydraulic power unit—reservoir, valves, fittings
- Hydraulic cylinders
- All hydraulic hoses and fittings

Maintenance

A-4

Check the Hydraulic Oil Level



Maintaining the hydraulic oil at the proper level is essential to machine operation. Improper hydraulic oil levels can damage hydraulic components. Daily checks allow the inspector to identify changes in oil level that might indicate the presence of hydraulic system problems.

NOTICE Perform this procedure with the platform in the stowed position and the motor off.

1 Remove the hydraulic oil dipstick (fill cap), wipe it clean and reinstall it.

2 Take the hydraulic oil dipstick out again, and check the oil level.

3 If the hydraulic oil level is too low and add new hydraulic oil to the prescribed level.

NOTICE Hydraulic oil specifications of leaving the factory：L-HV46

Customers should choose suitable Hydraulic oil according to environment temperature, such as L-HV32 or L-HV68.

A-5

Check the Platform Manual Lowering Operation

Detection of a platform manual lowering malfunction is essential for safe machine operation. An unsafe working condition exists if the manual lowering function does not operate in the event of a main and auxiliary power failure.

1 Raise the platform approximately 60 cm.

2 Pull out the emergency lowering knob.

⊙ Result: The platform should lower.

A-6

Check the Sequencing Cables

Maintaining the system of sequencing cables in good condition can reduce risk effectively after chains break.

1 Raise the platform approximately 2 m

2 Visually inspect condition of every wire rope and both ends：

- Excessive corrosion or contamination
- Untightened wire ropes
- Deformed seat plates
- Missing or damaged related components

3 Inspect the chain terminations near the bottom of each column to confirm that each seat plate has a lock nut.

A-7

Check the Interlock System for Proper Operation

1 Release the Emergency Stop switch at the platform controls.

⊙ Result: The up/down functions should operate.

2 Unscrew one leveling jack until the corresponding interlock display light turns off, and remain the light of tilt sensor green.

⊙ Result: The up and down functions should not operate.

3 Return the leveling jack to the previous setting and check the bubble level. Repeat this procedure for each outrigger.

Maintenance

A-8

Perform Function Tests

Completing the function tests is essential to safe machine operation. Function tests are designed to discover any malfunctions before the machine is put into service. A malfunctioning machine must never be used. If malfunctions are discovered, the machine must be tagged and removed from service.

Complete information to perform this procedure is available in the appropriate operator's manual. Refer to the Operator's Manual on your machine.

A-9

Inspect the Lifting Chains and Idler Wheels

Maintaining the lifting chains and idler wheels in good condition is essential to safe machine operation. Failure to find and replace damaged chains or idler wheels could result in unsafe operating conditions and may cause component damage.

1 Raise the platform approximately 2 m

2 Visually inspect the chains and idler wheels near the top of each column for the following:

- Excessive corrosion or contamination
- Broken or missing chain leafs and pins
- Tight or kinked joints in the chain
- Missing or damaged idler wheels and related components

3 Inspect the chain terminations near the bottom of each column to confirm that each termination has a lock nut.

Checklist B Procedures

B-1

Inspect the Electrical Wiring



Maintaining electrical wiring in good condition is essential to safe operation and good machine performance. Failure to find and replace burnt, chafed, corroded or pinched wires could result in unsafe operating conditions and may cause component damage.

⚠WARNING Electrocution / burn hazard. Contact with electrically charged circuits could result in death or serious injury. Remove all rings, watches and other jewelry.

1 Inspect the following areas for burnt, chafed, corroded and loose wires:

- All base wiring
- Inside of the ground control box
- Inside of the base junction boxes
- Hydraulic power unit
- All external machine electrical cables
- Inside of the platform control box
- DC models: battery and charger
- AC power supply cord

B-2

Inspect All Welds

Weld inspections are essential to safe machine operation and good machine performance. Failure to locate and repair damage may result in an unsafe operating condition.

Visually inspect the welds in the following locations:

- Platform
- chassis
- Mast brace mounting brackets

Maintenance

B-3

Check the Lifting Chain Adjustment

Maintaining proper adjustment of the lifting chains is essential to safe machine operation. Failure to maintain proper chain adjustment could result in unsafe operating conditions and may cause component damage.

NOTICE Every link of the transmission chain is associated with three links of the masts.

1 Lower the platform to the stowed position.

2 Measure the maximum height of the machine.

⊙ Result: The machine should be no lower than specification.

⌑ Result: The machine should be lower than specification.

The following sketch shows the connection of the masts and the transmission chain.

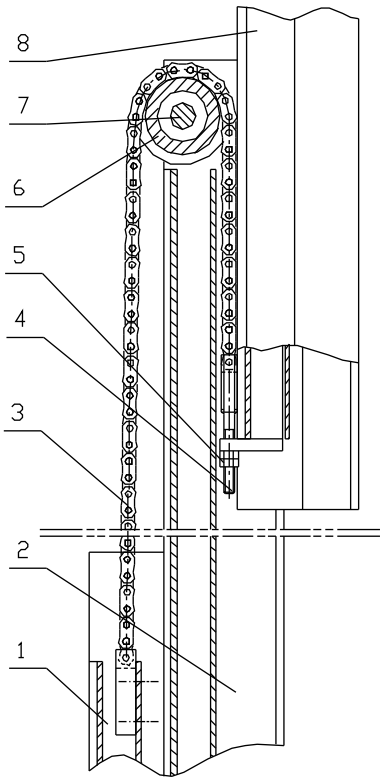

1-next link of the mast

2-the middle link of the mast

3-the transmission chain

4-adjusting bolt

5-adjusting lock nut

6-chainwheel

7-chainwheel shaft

8-the last link of the mast

3 When regulating the length of the chain, please select the mast that needs increasing its height. As shown in the sketch, regulating the nut 5 tightly makes the last link of the mast 8 move upwards. The dual nuts 5 should be connected with each other tightly after regulating the length of the chain.

4 The same link of the mast is pulled by two chains and endures the raised weight loads at the same time. If one of the chains loses efficacy, the other will play an important safety role; therefore, try to make both chains as loose or tight as consistent each other when regulating the length of the chain. The methods of judge at site are as follows: Press the two chains by hands to compare their tautness under lifting status.

⚠WARNING Make sure the safety supporting device is in place during maintenance

⚠WARNING When the work platform of a GTWY needs to be raised for routine servicing purposes, the safety supporting device shall be used to enable the extending structure to

be held in the required position to prevent work platform from falling down unexpectedly.



B-4

Inspect the Battery (DC Models)

Proper battery condition is essential to good machine performance and operational safety. Improper fluid levels or damaged cables and connections can result in component damage and hazardous conditions.

⚠WARNING Electrocution / burn hazard. Contact with electrically charged circuits could result in death or serious injury. Remove all rings, watches and other jewelry.

⚠WARNING Bodily injury hazard. Batteries contain acid. Avoid spilling or contacting battery acid. Neutralize battery acid spills with baking soda and water.

1 Put on protective clothing and eye wear.

2 Be sure that the battery cable connections are free of corrosion.

Note: Adding terminal protectors and a corrosion preventative sealant will help eliminate corrosion on the battery terminals and cables.

3 Be sure that the battery retainers and cable connections are tight.

4 Fully charge the batteries. Allow the batteries to rest 24 hours before performing this procedure to allow the battery cells to equalize.

Models without maintenance-free or sealed batteries:

5 Remove the battery vent caps and check the specific gravity of each battery cell with a hydrometer. Note the results.

6 Check the ambient air temperature and adjust the specific gravity reading for each cell as follows:

Maintenance

• Add 0.004 to the reading of each cell for every 5.5° C above 26.7° C.

• Subtract 0.004 from the reading of each cell for every 5.5° C below 26.7° C.

☉ Result: All battery cells display an adjusted specific gravity of 1.277 or higher. The battery is fully charged. Proceed to step 10.

¤ Result: One or more battery cells display a specific gravity of 1.217 or below. Proceed to step 7.

7 Perform an equalizing charge OR fully charge the batteries and allow the batteries to rest at least 6 hours.

8 Remove the battery vent caps and check the specific gravity of each battery cell with a hydrometer. Note the results.

9 Check the ambient air temperature and adjust the specific gravity reading for each cell as follows:

• Add 0.004 to the reading of each cell for every 5.5° C above 26.7° C.

• Subtract 0.004 from the reading of each cell for every 5.5° C below 26.7° C.

☉ Result: All battery cells display a specific gravity of 1 .277 or greater. The battery is fully charged. Proceed to step 10.

¤ Result: The difference in specific gravity readings between cells is greater than 0.1 OR the specific gravity of one or more cells is less than 1.177. Replace the battery.

10 Check the battery acid level. If needed, replenish with distilled water to 3 mm below the bottom of the battery fill tube. Do not overfill.

11 Install the vent caps and neutralize any electrolyte that may have spilled.

All models:

12 Check each battery pack and verify that the batteries are wired correctly.

13 Inspect the battery charger plug and pigtail for damage or excessive insulation wear. Replace as required.

14 Connect the battery charger to a properly grounded 110 - 230V / 50 – 60 Hz single phase AC power supply.

☉ Result: The charger should operate and begin charging the batteries.

¤ Result: If, simultaneously, the charger alarm sounds and the LEDs blink, correct the charger connections at the fuse and battery. The charger will then operate correctly and begin charging the batteries.

Note: For best results, use an extension of adequate size with a length no longer than 15m.

Note: If you have any further questions regarding the battery charger operation, please contact the DINGLI Service Department.

B-5

Clean and Lubricate the Chains and Masts



Clean and properly lubricated masts are essential to good machine performance and safe operation. Extremely dirty conditions may require that the masts be cleaned and lubricated more often.

1 Raise the platform to the maximum height.

2 Visually inspect the inner and outer channels of the masts for debris or foreign material. If necessary, use a mild cleaning solvent to clean the columns.

3 The bearing between chain wheel with the shaft is lubricated with the calcium base grease in raising.

4 Lubricate the place between chain wheel with chain used grease gun.

5 Lubricate the lead rail with the calcium base grease in raising.

⚠WARNING This procedure will require the use of additional access equipment. Do not place ladders or scaffold on or against any part of the machine. Performing this procedure without the proper skills and tools may result in death or serious injury. Dealer service is strongly recommended.

B-6

Test the Lifting Capacity



The proper pressure of hydraulic system has been preset at the factory, however, the regulating value has been changed because of using the product for a long term.

Proper lifting capacity is essential to safe machine operation. Improper lifting capacity adjustment could allow machine to be overloaded and may cause death or serious injury.

⚠WARNING This procedure requires specific repair skills, lifting equipment and a suitable workshop. Attempting this procedure without these skills and tools may result in death or serious injury and significant component damage. Dealer service is strongly recommended.

1 Place the maximum load capacity in the platform. Refer to the operator's manual specifications or the load capacity decal on the machine to determine the maximum load capacity. Be sure the load is secure.

2 Raise the platform slightly.

☉ Result: The hydraulic power unit should raise the platform.

3 Fully lower the platform.

4 Add an additional weight .that is 20% maximum load capacity to the platform. Secure the additional weight.

5 Raise the platform slightly.

☉ Result: The hydraulic power unit should not be able to raise the platform. The descent alarm should sound.

⌑ Result: The hydraulic power unit should be able to raise the platform. The descent alarm is not sound, need to recalibrate the

pressure sensor or replace the pressure sensor.

⚠WARNING Calibrate the pressure sensor after replacing it. Proper lifting capacity is essential to safe machine operation. Improper lifting capacity adjustment could allow machine to be overloaded and may cause death or serious injury.

The calibration steps of pressure sensor are as follows:

1 No-load calibration: Ensure no load on the platform. Turn the key switch to platform control, push the Platform up/down switch at ground control in sequence: down – down – down – down – down – up – down – down – down – down – down –up – down – up – down – down - down, the machine automatically up and down for calibration. After calibration, the alarm should sound.

2 Full-load calibration: place the maximum load capacity in the platform. Refer to the operator's manual specifications or the load capacity decal on the machine to determine the maximum load capacity, Turn the key switch to platform control, push the Platform up/down switch at ground control in sequence: down – down – down – down – down – up – down – down – down – down – down –up – down – down – down – down - down, the machine automatically up and down for calibration. After calibration, the alarm should sound.

3 Place the maximum load capacity in the platform.

⊙ Result: the overload indicator light is not lighted, the platform can lift up and down.

⌑ Result: the overload indicator light is lighted, the platform can't lift up and down, overload alarm. Calibrate again.

4 Add an additional weight .that is 20% maximum load capacity to the platform. Secure the additional weight.

⊙ Result: the overload indicator light is lighted, the platform can't lift up and down, overload alarm. Calibrate again.

⌑ Result: the overload indicator light is not lighted, the platform can lift up and down. Calibrate again.

B-7

Test the Up Limit Switch



Maintaining the limit switches is essential to safe operation and good machine performance.

Operating the machine with a faulty limit switch could result in reduced machine performance and a potentially unsafe operating condition.

Perform these procedures with the machine on a firm, level surface that is free of obstructions.

1 Turn the key switch to ground control.

2 While raising the platform from the ground controls, push in the roller of the up limit switch to activate the limit switch.

☉ Result: The platform stops raising. The machine is functioning properly.

☒ Result: The platform continues to raise. Adjust or replace the up limit switch.

B-8

Test the Down Limit Switch



Maintaining the limit switches is essential to safe operation and good machine performance.

Operating the machine with a faulty limit switch could result in reduced machine performance and a potentially unsafe operating condition.

Perform these procedures with the machine on a firm, level surface that is free of obstructions.

1 Turn the key switch to ground control.

2 Raise the platform approximately 2.5m.

3 While lowing the platform from the ground controls, push in the roller of the down limit switch to activate the limit switch.

☉ Result: The platform stops lowering. The machine is functioning properly.

☒ Result: The platform continues to lowering. Adjust or replace the down limit switch.

Maintenance

Checklist C Procedures

C-1

Inspect and Lubricate the Casters



Extremely dirty conditions may require that the casters be inspected and lubricated more often.

1 Visually inspect each caster for cuts, cracks or unusual wear.

2 Move the machine on a flat smooth surface and check that the casters roll smoothly.

3 Pump grease into the caster until it can be seen coming out of the bearing seal gap.

C-2

Replace the Hydraulic Oil



Replacement or testing of the hydraulic oil is essential for good machine performance and service life. Dirty oil may cause the machine to perform poorly and continued use may cause component damage. Extremely dirty conditions may require oil changes to be performed more often.

Note: Perform this procedure with the platform in the stowed position.

1 Disconnect the battery pack from the machine.

⚠WARNING Electrocution / burn hazard. Contact with electrically charged circuits could result in death or serious injury. Remove all rings, watches and other jewelry.

2 Tag and disconnect the hydraulic pump outlet line and remove the line from the pump. Cap the fitting on the pump.

3 Loose the bolt and remove the hydraulic power pack form the tray.

4 Loose and remove the bolts and separate the tank from the pump body.

5 Drain all of the oil into a suitable container.

⚠WARNING Bodily injury hazard. Spraying hydraulic oil can penetrate and burn skin. Loosen hydraulic connections very slowly to allow the oil pressure to dissipate gradually. Do not allow oil to squirt or spray.

6 Clean up any oil that may have spilled. Properly discard the used oil.

7 Clean the inside of the hydraulic tank using a mild solvent. Allow the tank to dry completely.

8 Install the hydraulic tank and install and

tighten the hydraulic tank retaining fasteners. Torque to specification.

Torque specifications	
Hydraulic tank retaining fasteners, dry	4 Nm
Hydraulic tank retaining fasteners, lubricated	2.9Nm

9 Install the hydraulic power pack into the tray. Install the fitting and hydraulic hoses onto the hydraulic power pack and torque.

10 Fill the tank with hydraulic oil until the fluid is full in the hydraulic tank. Do not overfill.

11 Activate the pump to fill the hydraulic system with oil and bleed the system of air.

⚠WARNING Component damage hazard. The pump can be damaged if operated without oil. Be careful not to empty the hydraulic tank while in the process of filling the hydraulic system. Do not allow the pump to cavitate.

Maintenance

Trouble shooting

Most of the problems you meet with are easy to solve when you are operating on the mobile elevating work platform. Please find out your problems in this part and solve it according to the recommended steps. If you can't still solve it according to the instructions here, please contact with your suppliers or the experienced service personnel for help.

Problem 1: The LED is off and the platform doesn't rise or fall.

1 Check whether the electrical wire is connected with the socket of the electricity supply correctly or not.

2 Check the circuit breaker to make sure it's in "ON" position.

Problem 2: The LED is on, but there is a 'ticking" sound in the electric box when the platform up button is pressed and the platform can't lift or it can only rise up to a limited height.

1 Check the electrical cable to see if it is too long or too thin. The diameter of cable wire should be minimum 1.0 mm when the wire length is less than 25 meters, and minimum 1.5 mm when the wire length is above 25 meters and less than 50 meters. You can try to plug the equipment cord directly in the fixed socket, instead of to an extension cord.

2 Check power voltage to make sure it is within allowable limits.

Problem 3: Excessive noise from hydraulic power unit during 'lifting' operation.

1 Check oil box to make sure there is sufficient hydraulic oil in the tank.

2 Check whether the oil filler cap is excessively sealed to make the oil pump difficult to absorb the oil or not.

3 Check the mounting screws of the electric motor and cover etc. to see if they have become loose.

4 Check whether the environment humidity is in accordance with the stipulated conditions or not.

Problem 4: Leakage of the hydraulic oil

1 Check all piping connections for their tightness, and tighten up if necessary.

2 Check whether the viscosity of the used hydraulic oil is too low or not.

Problem 5: All the LED are on, but the platform couldn't rise or fall.

1 Check the Emergency stop switches on both upper and lower control device.

2 Reset the switch by turning the knob in the direction shown by the arrow.

Error indicator readout



The LED readout screen displays fault codes that provide information about the machine operating status and about malfunctions. The fault codes listed in the following charts describe malfunctions and can aid in troubleshooting the machine by pinpointing the area or component affected.

List of Fault Codes

Display	Description	Machine exhibition
01	System initialization Fault	Disables All Motion
03	Invalid option setting Fault	Disables All Motion
12	Chassis Up/Down Switch ON at Power-up Fault	Disable Chassis Control
13	Platform Up/Down Switch ON at Power-up Fault	Disable Platform Control
31	Pressure Sensor 1 Fault	Disables All Motion
32	Angle Sensor Fault	Disables All Motion
35	Pressure Sensor 2 Fault	Disables All Motion
36	Low Battery Alert	Warning Only
54	Lift Up Coil Fault	Disable Lifting
55	Lift Down Coil Fault	Disable Lifting
59	Contactor Coil Fault	Disable Lifting
68	Low Voltage Fault	Disable All Motion
OL	Overloaded Platform Fault	Disable All Motion
LL	Machine Tilted Beyond Safe Limits Fault	Disable Lifting
-L	Outrigger Not Extended Fully Fault	Disable All Motion

Maintenance

Troubleshooting Guide

Display	Troubleshooting method
01	System Initialization Fault: ECU may be malfunctioning, replace it.
03	Invalid Option setting Fault: Set appropriate option for this lift.
12	Chassis Toggle Switch ON at power-up Fault: Check the wires to the Toggle Switch or look for a stuck Toggle Switch.
13	Platform Toggle Switch ON at power-up Fault: Check the wires to the Toggle Switch or look for a stuck Toggle Switch.
31	Pressure Sensor 1 Fault: Check the wiring to the sensor and then the sensor itself.
32	Angle Sensor Fault: Check the wiring to the sensor and then the sensor itself. Also check to make sure that the correct option is properly selected (or not) for load sensing
35	Pressure Sensor 2 Fault: Check the wiring to the sensor and then the sensor itself.
36	Low Voltage Alert: Check battery voltage and charge batteries if necessary.
54	Lift Up Coil Fault: Check the connections to the Coil's terminals and make sure they are tight. If so, check the coil itself to see if it is open or shorted.
55	Lift Down Coil Fault: Check the connections to the Coil's terminals and make sure they are tight. If so, check the coil itself to see if it is open or shorted.
59	Contactor Coil Fault: Check the connections to the Coil's terminals and make sure they are tight. If so, check the coil itself to see if it is open or shorted.
68	Low Voltage Fault: Check battery voltage and charge batteries if necessary. Check the battery connections and tighten or clean.
OL	Overloaded Platform Fault: Remove the excess load immediately.
LL	Machine Tilted Beyond Safe Limits Fault: If the machine is tilted, find a way to make it level. If the machine is level, check the wiring to the tilt sensor and then the sensor itself.
-L	Outrigger Not Extended Fully Fault: If the machine has an outrigger not extended fully, check the outrigger is extended fully or not; If the outriggers are all extended fully, check the wiring to the limit switch and then the switch itself.

For more information, please consult the appropriate Dingli Service Dept.

Schematic

Hydraulic Schematic

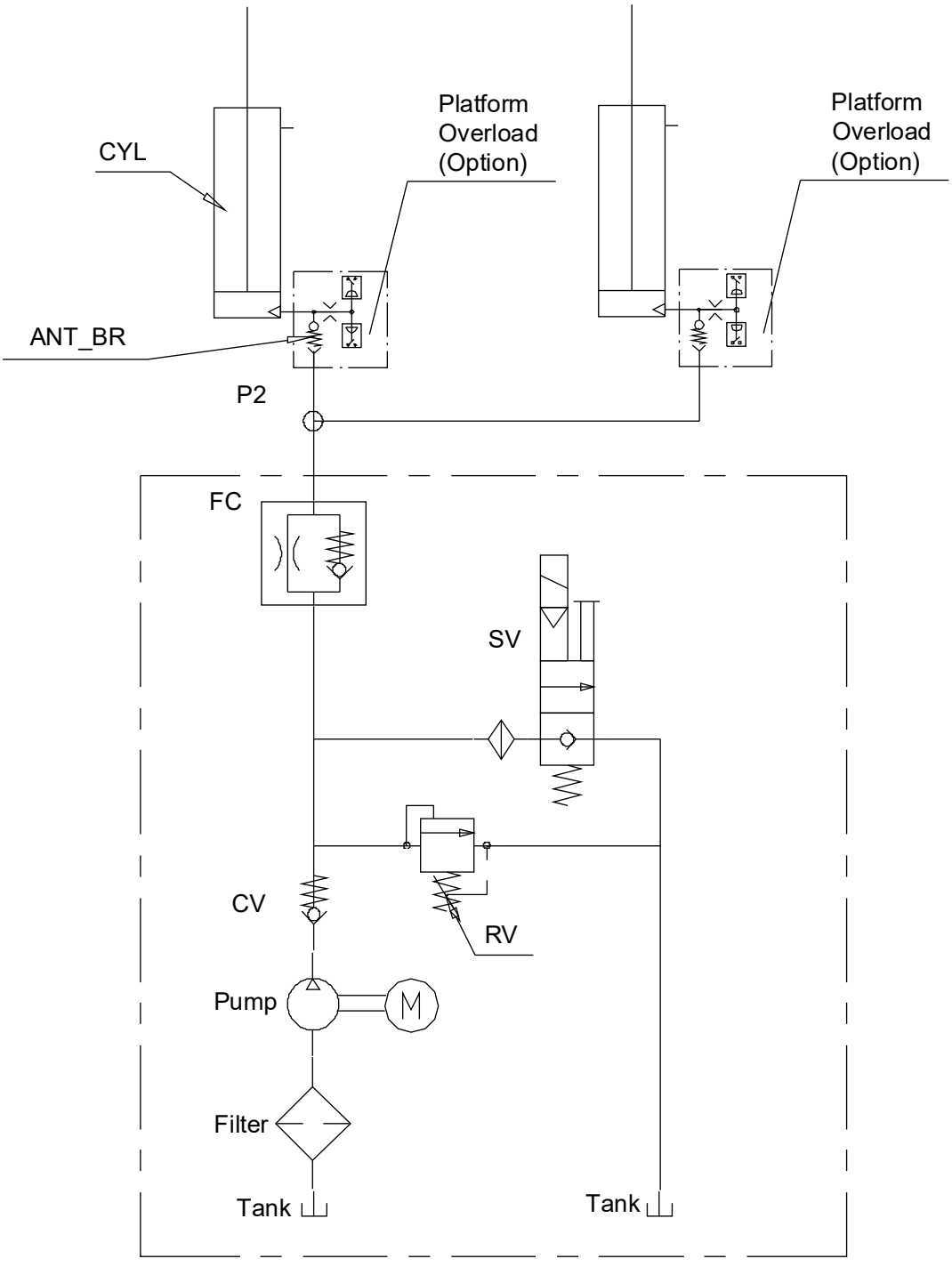

Electrical Schematic (AC Model)

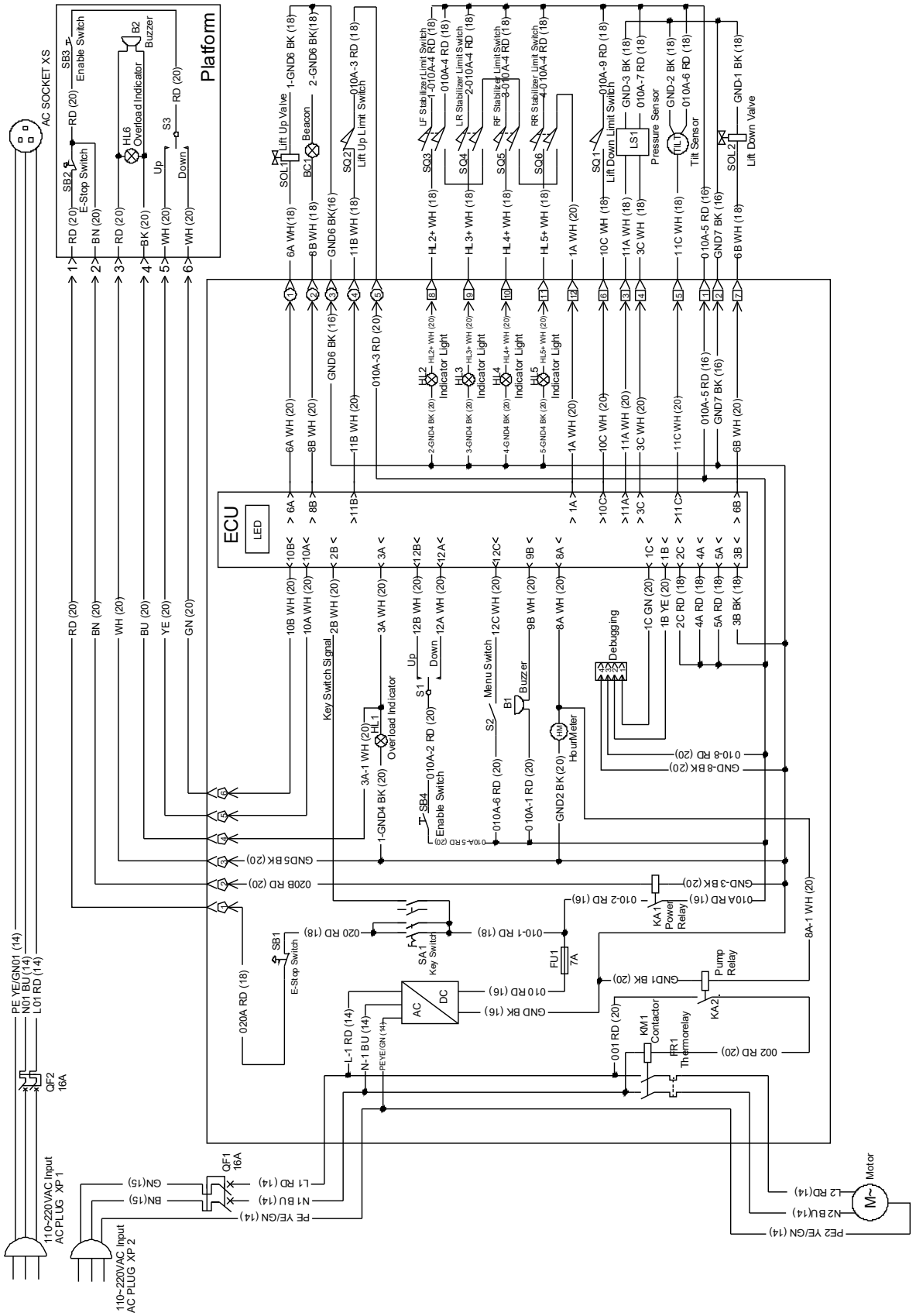

Schematic

Electrical Schematic (DC Model)

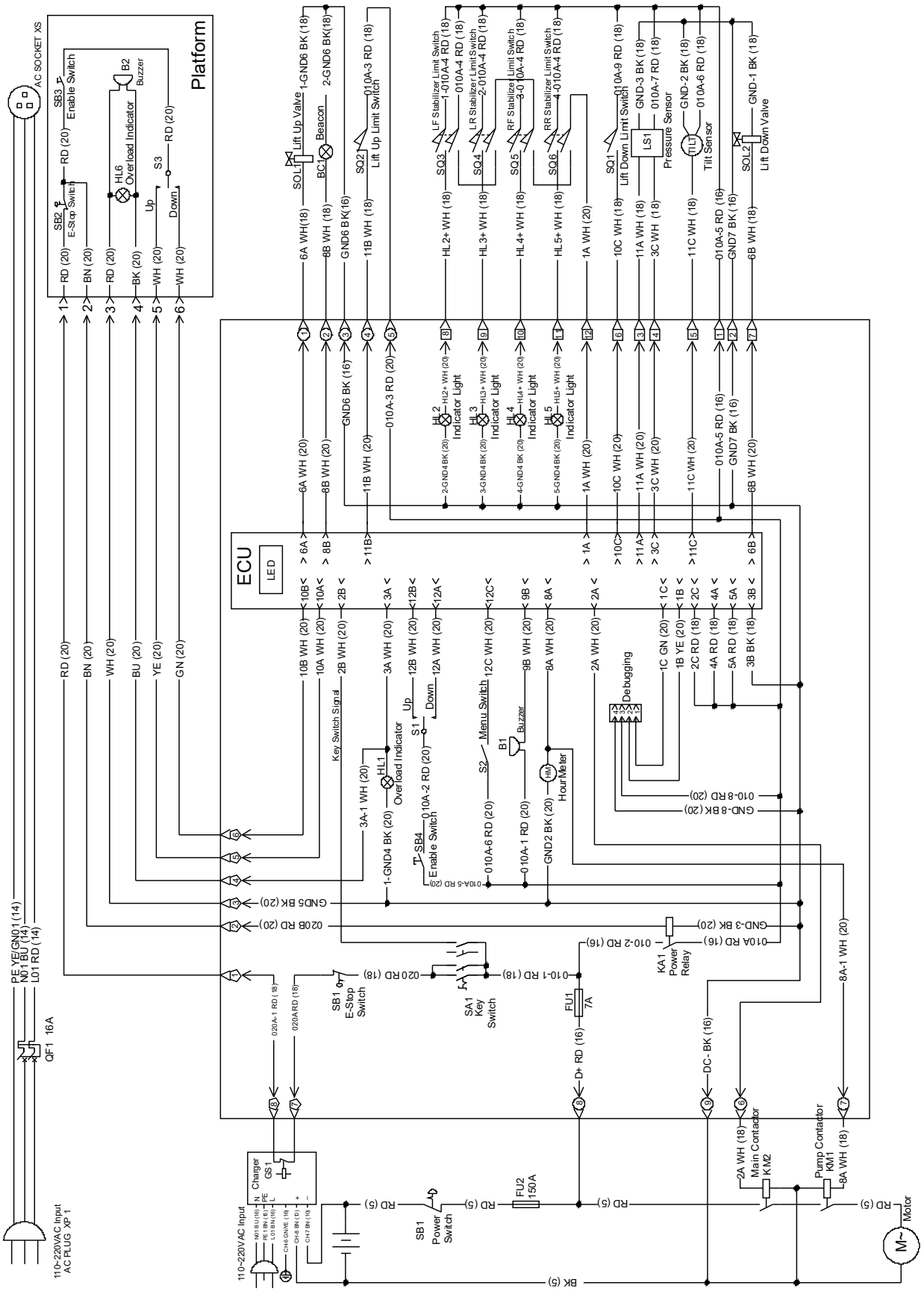

Schematic

Inspection and Repair Log

Inspection and Repair Log

Date	Comments