SELF-PROPELLED STOCK PICKER

OPERATOR'S MANUAL

with Maintenance Information

For ZDYT3-4.5S

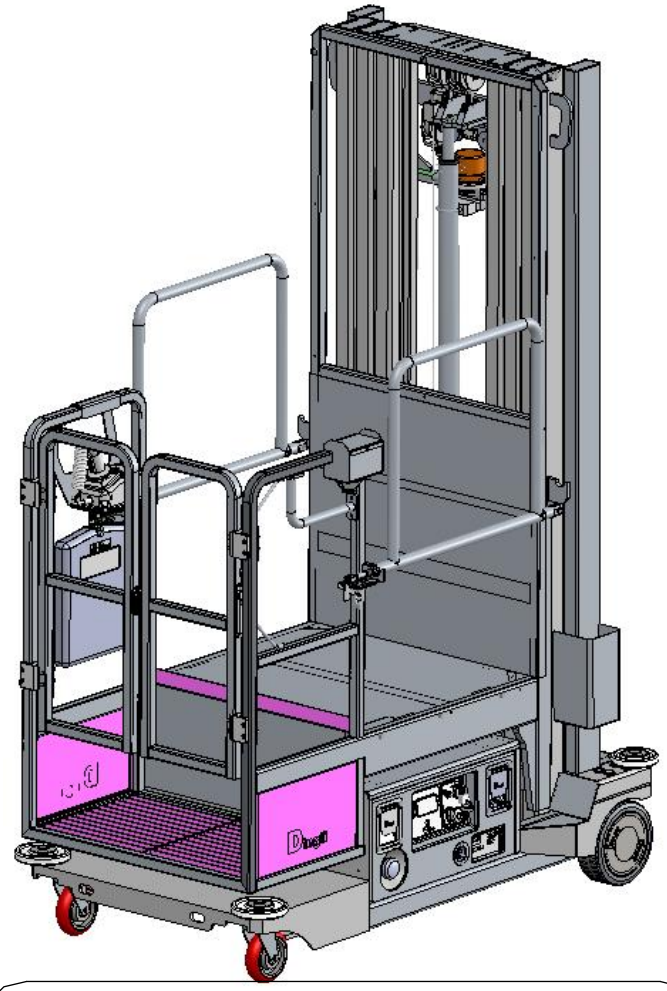

WARNING

THE MANUFACTURER SHALL NOT BE HELD LIABLE IN CASE OF FAULTS OR ACCIDENTS DUE TO NEGLIGENCE, INCAPACITY, INSTALLATION BY UNQUALIFIED TECHNICIANS AND IMPROPER USE OF THE MACHINE

DO NOT OPERATE THIS MACHINE UNTIL YOU READ AND UNDERSTAND ALL THE DANGERS,WARNINGS AND CAUTIONS IN THIS MANUAL

Part Number: SM0717111_Rev2.0

.
Zhejiang Dingli Machinery Co., Ltd.

2020-07

Version of the Record

Version Number	Create Date
SM0717111_Rev1.0	2020-07
SM0717111_Rev2.0	2021-09

Important

Read, understand and obey these safety rules and operating instructions before operating this machine.

Only trained and authorized personnel shall be permitted to operate this machine. This manual should be considered a permanent part of your machine and should remain with the machine at all times. If you have any questions, please call DINGLI Machinery.

Owners, Users and operators:

We appreciate your choice of our machine for your application. Our number one priority is user safety, which is best achieved by our joint efforts. We feel that you make a major contribution to safety if you, as the equipment users and operators:

1 Comply with employer, job site and governmental rules.

2 Read, understand and follow the instructions in this and other manuals supplied with this machine.

3 Use good safe work practices in a commonsense way.

4 Only have trained / certified operators, directed by informed and knowledgeable supervision, running the machine.

If there is anything in this manual that is not clear or which you believe should be added, please contact us.

Contents

	Page
Safety Rules	1
Legend	7
Decals	8
Specifications	11
Control panel	12
Pre-Operating Instructions	16
Workplace Inspection	18
Function Tests	19
Operating Instructions	23
Transport and Lifting Instructions	32
Maintenance	34
Schematic	57
Inspection and Repair Log	59

Contact us:

Zhejiang Dingli Machinery Co., Ltd.

1255 Baiyun South Road. Leidian Town. Deqing Zhejiang

China

Tel: +86-572-8681688

Fax: +86-572-8681690

Web: www.cndingli.com

E-mail:market@cndingli.com

Safety Rules



Danger

Failure to obey the instructions and safety rules in this manual will result in death or serious injury.

Do Not Operate Unless:

☑ You learn and practice the principles of safe machine operation contained in this operator's manual.

1 **Avoid hazardous situations.**

Know and understand the safety rules before going on to the next section.

2 Always perform a pre-operation inspection.

3 Always perform function tests prior to use.

4 Inspect the workplace.

5 Only use the machine as it was intended.

☑ You read, understand and obey the manufacturer's instructions and safety rules— safety and operator's manuals and machine decals.

☑ You read, understand and obey employer's safety rules and worksite regulations.

☑ You read, understand and obey all applicable governmental regulations.

☑ You are properly trained to safely operate the machine.

Decal Legend

DINGLI product decals use symbols, color coding and signal words to identify the following:

 Safety alert symbol—used to alert personnel to potential personal injury hazards. Obey all safety messages that follow this symbol to avoid possible injury or death.



Red—used to indicate the presence of an imminently hazardous situation which, if not avoided, will result in death or serious injury.



Orange—used to indicate the presence of a potentially hazardous situation which, if not avoided, could result in death or serious injury.



Yellow with safety alert symbol- used to indicate the presence of a potentially hazardous situation which, if not avoided, may cause minor or moderate injury.



Blue without safety alert symbol—used to indicate the presence of a potentially hazardous situation which, if not avoided, may result in property damage.

Safety Rules

Intended Use

The power stocker personnel lifts intended purpose is to provide personnel access to areas above ground level.

This machine is intended for use **INDOORS ONLY**, and must not be used outdoors as wind forces may make it unstable.

Safety Sign Maintenance

Replace any missing or damaged safety signs. Keep operator safety in mind at all times. Use mild soap and water to clean safety signs. Do not use solvent-based cleaners because they may damage the safety sign material.

⚠ Electrocution Hazard



This machine is not electrically insulated and will not provide protection from contact with or proximity to electrical current.

Maintain safe distances from electrical power lines and apparatus in accordance with applicable governmental regulations and the following chart.

Voltage Phase to Phase	Minimum Safe Approach Distance Meters
0 to 300V	Avoid Contact
300V to 50kV	3.05
50kV to 200kV	4.60
200kV to 350kV	6.10
350kV to 500kV	7.62
500kV to 750kV	10.67
750kV to 1000kV	13.72

Keep away from the machine if it contacts energized power lines. Personnel on the ground or in the platform must not touch or operate the machine until energized power lines are shut off.

Do not use the machine as a ground for welding.

⚠ Tip-over Hazard

This machine is intended for use **INDOORS ONLY**, and must not be used outdoors as wind forces may make it unstable.

Occupants, equipment and materials must not exceed the maximum platform capacity or the maximum capacity of the platform extension.

Maximum capacity – ZDYT3-4.5S

Maximum occupants (**Indoor use ONLY**) 1

Platform allowable maximum load 300kg

Work Area Safety

Do not raise the platform unless the machine is on a firm, level surface.

Do not drive over 0.8 km/h with the platform raised.





Do not depend on the tilt alarm as a level indicator. The tilt alarm sounds on the chassis and in the platform when the machine is on a slope.

If the tilt alarm sounds:

Lower the platform. Move the machine to a firm, level surface. If the tilt alarm sounds

when the platform is raised, use extreme caution to lower the platform.

Do not use the platform controls to free a platform that is caught, snagged or otherwise prevented from normal motion by an adjacent structure. All personnel must be removed from the platform before attempting to free the platform using the ground controls.

Use extreme care and slow speeds while driving the machine in the stowed position across uneven terrain, debris, unstable or slippery surfaces and near holes and drop-offs.

Do not drive the machine on or near uneven terrain, unstable surfaces or other hazardous conditions with the platform raised.

Do not push off or pull toward any object outside of the platform.





Maximum allowable manual force	200N

Do not use the machine as a crane.

Do not place or attach fixed or overhanging loads to any part of this machine.

Do not push the machine or other objects with the platform.

Do not contact adjacent structures with the platform.

Do not alter or disable the limit switches.

Do not tie the platform to adjacent structures.

Do not place loads outside the platform perimeter.





Do not alter or disable machine components that in any way affect safety and stability.

Do not replace items critical to machine stability with items of different weight or specification.

Do not use batteries that weigh less than the original equipment. Batteries are used as counterweight and are critical to machine stability. Each battery must weigh more than 30kg. Two batteries must weigh a minimum of 60kg.

Do not modify or alter an aerial work platform without prior written permission from the manufacturer. Mounting attachments for holding tools or other materials onto the platform, toe boards or guard rail system can increase the weight in the platform and the surface area of the platform or the load.

Do not place ladders or scaffolds in the platform or against any part of this machine.

Do not transport tools and materials unless they are evenly distributed and can be safely handled by person(s) in the platform.

Do not use the machine on a moving or mobile surface or vehicle.

Be sure all tires are in good condition and lug nuts are properly tightened.

⚠ Crushing Hazard

Keep hands and limbs out of masts.

⚠ Operation on Slopes Hazard

Do not drive the machine on a slope that exceeds the slope and side slope rating of the machine.

Safety Rules

Slope rating applies to machines in the stowed position.

Model	Maximum slope rating stowed position	Maximum side slope rating stowed position
ZDYT3-4.5S	25%	10%

Note: Slope rating is subject to ground conditions and adequate traction.

⚠ Fall Hazard

The guard rail system provides fall protection. During operation, occupants in the platform must wear a safety belt with a lanyard attached to an authorized lanyard anchorage point. Attach only one (1) lanyard per lanyard anchorage point.

Do not sit, stand or climb on the platform guard rails. Maintain a firm footing on the platform floor at all times.





Do not climb down from the platform when raised.

Keep the platform floor clear of debris.

Close the entry gate before operating.

Do not operate the machine if the entry gate is not secured for operation.

⚠ Collision Hazard



Be aware of limited sight distance and blind spots when driving or operating.

Operators must comply with employer, job site and governmental rules regarding use of personal protective equipment.

Check the work area for overhead obstructions or other possible hazards.





Be aware of crushing hazards when grasping the platform guard rail.

Observe and use color-coded direction arrows on the platform controls and platform decal plate for drive and steer functions.

Do not operate a machine in the path of any crane or moving overhead machinery unless the controls of the crane have been locked out and/or precautions have been taken to prevent any potential collision.

No stunt driving or horseplay while operating a machine.

Do not lower the platform unless the area below is clear of personnel and obstructions.





Limit travel speed according to the condition of the ground surface, congestion, slope, location of personnel, and any other factors which may cause collision.

⚠ Component Damage Hazard

Do not use any battery or charger greater than 24V.

Do not use the machine as a ground for welding.

⚠ Explosion and Fire Hazard

Do not operate the machine or charge the batteries in hazardous locations where potentially flammable or explosive gases or particles may be present.

⚠ Damaged Machine Hazard

Do not use a damaged or malfunctioning machine.

Conduct a thorough pre-operation inspection of the machine and test all functions before each work shift. Immediately tag and remove from service a damaged or malfunctioning machine.

Be sure all maintenance has been performed as specified in this manual

Be sure all decals are in place and legible.

Be sure the manuals are complete, legible and in the storage container located in the platform.

⚠ Crushing Hazard

Use common sense and planning when operating the machine with the controller from the ground. Maintain safe distances between the operator, the machine and fixed objects.

⚠ Bodily Injury Hazard

Do not operate the machine with a hydraulic oil or air leak. An air leak or hydraulic leak can penetrate and/or burn skin.

Improper contact with components under any cover will cause serious injury. Only trained maintenance personnel should access compartments. Access by the operator is only advised when performing a pre-operation inspection. All compartments must remain closed and secured during operation.

⚠ Battery Safety

⚠ Burn Hazard



Unit is equipped with Lithium Batteries. Only trained maintenance personnel should work on batteries. Do not remove or replace batteries without DINGLI's approval.

⚠ Explosion Hazard



Keep sparks, flames and lighted tobacco away from batteries. Batteries emit explosive gas.

Do not contact the battery terminals or the cable clamps with tools that may cause sparks.

⚠ Component Damage Hazard

Do not use any battery charger greater than 24V to charge the batteries.

Safety Rules

⚠ Electrocution/ Burn Hazard



Connect the battery charger to a grounded, AC 3-wire electrical outlet only.

Inspect daily for damaged cords, cables and wires. Replace damaged items before operating.

Avoid electrical shock from contact with battery terminals. Remove all rings, watches and other jewelry.

⚠ Tip-over Hazard

Do not use batteries that weigh less than the original equipment. Batteries are used as counterweight and are critical to machine stability. Each battery must weigh more than 30kg. Two batteries must weigh a minimum of 60kg.

⚠ Lifting Hazard

Use the appropriate number of people and proper lifting techniques when lifting batteries.

Lockout after Each Use

1 Select a safe parking location - firm level surface, clear of obstruction and traffic.

2 Lower the platform.

3 Turn the key switch to the off position and remove the key to secure from unauthorized use.

4 Chock the wheels.

5 Charge the batteries.

Legend

ZDYT3-4.5S

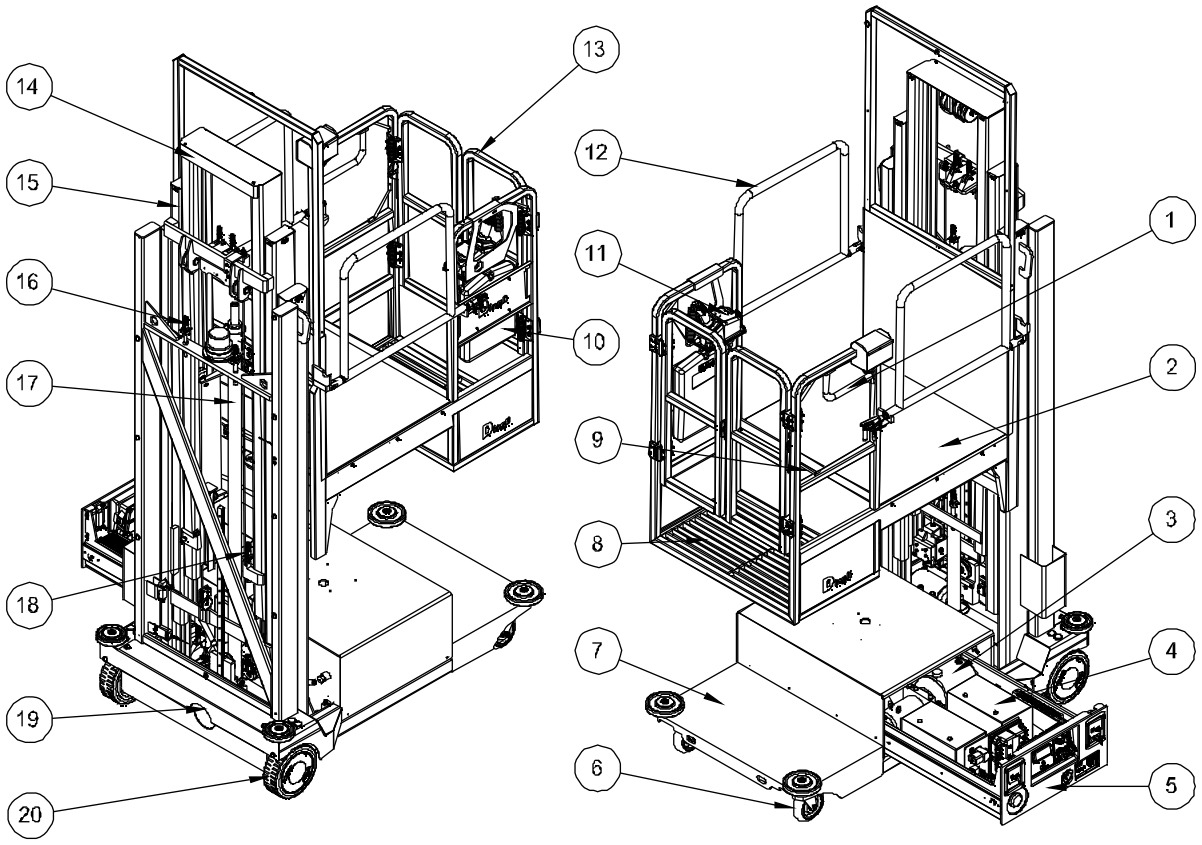

1 Handrail
2 Platform
3 Hydraulic pump unit
4 Battery
5 Electric control box
6 Front wheel
7 Chassis and outer mast
8 Operator platform
9 Lanyard anchorage point
10 Manual storage container
11 Joystick control
12 Platform guard rails
13 Platform entry gate
14 Inside mast
15 Middle mast
16 Chain
17 Cylinder
18 Descending Auxiliary Device
19 Emergency lowering assembly
20 Drive wheel

Decals

Decal Inspection

Use the pictures on the next page to verify that all decals are legible and in place.

Below is a numerical list with quantities and descriptions.

No.	Part No.	Description	Qty.	Remark
1	09440066	Decal, Caution-Max. manual force 200N	2	
2	09440011	Decal, Label-Lanyard anchorage point	1	
3	09340001	Decal, Notice-Keep the manual with the machine	1	
4	9314013	Instructions – Refer the operator to the instructions for use	2	
5	9444013	Decal, Label-Capacity 300kg	1	
6	9444055	Decal, Warning-Tip-over Hazard	1	
7	9444051	Decal, Danger-General safety rules	1	
8	09310002	Decal, Instructions-Lift point	2	
9	9441013	Decal, Danger-Do not stand (Left)	1	
10	09310028	Decal, Instructions-Maximum wheel load 450kg	4	
11	09310006	Decal, Notice-Main power switch operation	1	
12	09420017	Decal, Danger-Do not stand	1	
13	09310004	Decal, Instructions-Emergency lower	1	
14	9441011	Decal, Danger-Do not stand (Right)	1	
15	09540002	Decal, Label-IPAF	1	

Decals

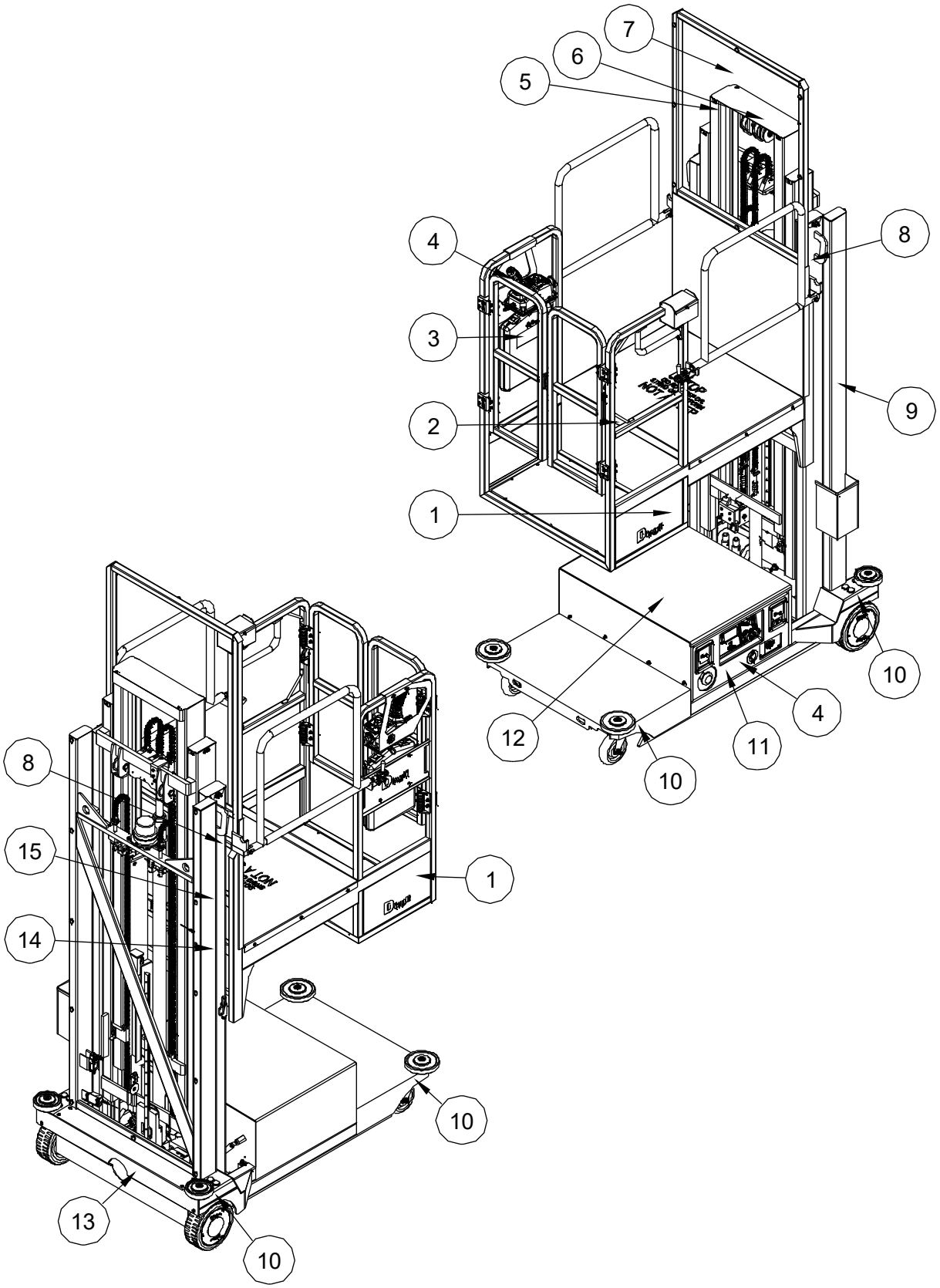

Decals


1 09440066
CAUTION
Max. Manual Force
200N
09440066
2 09440011
Restraint only 1 Occurrence
09440011
3 09340001
NOTICE
KEEP THE OPERATION ANDSAFETY MANUAL WITH THE MACHINE
09340001
4 09340003
Refer the operator to the instructions for use.
09340003
5 9444013
=300kg
0m/s
200N
9444013
6 9444055
WARNING
Tip-over Hazard
This machine is intended for
USE INDOORS ONLY,
and must not be used outdoors as wind forces may make it unstable.
MAX. allowed wind speed: 0 m/s.
9444055
7 9444051
9444051
8 09310002
09310002
9 9441013
DANGER
9441013
10 09310028
Maximum Wheel Load 450 kg
09310028
11 09310006
NOTICE
Cut off the power when the machine is repaired or not used for long period.
ON
OFF
09310006
12 09420017
DANGER
09420017
13 09310004
EMERGENCY LOWER
Pull knob to lower platform
09310004
14 9441011
DANGER
9441011
15 09540002
IPAF

Specifications

ZDYT3-4.5S

Height, working maximum	6.5m
Height, platform maximum	4.5m
Height, stowed maximum	2.280m
Width	1.057m
Length, stowed maximum	1.587m
Platform dimensions Platform length × width	1.18×0.8m
Maximum load capacity	300kg
Maximum wind speed	0m/s
Wheelbase	1.295m
Turning radius	0m
Ground clearance	8cm
Weight	840kg
Machine weights vary with option configurations	
Power source	2 Batteries , 12V 105AH
Controls	Proportional
AC outlet in platform	Standard
Maximum hydraulic pressure (functions)	160bar
System voltage	24V/10A
Driving wheels	Φ230×80mm
Front wheels	Φ150mm

Airborne noise emissions	<70dB
Maximum sound level at normal operating workstations (A-weighted)	
Vibration value does not exceed	2.5m/s^2
Maximum slope rating , Stowed position	25%
Maximum side slope rating Stowed position	10%
Note: Slope rating is subject to ground conditions and adequate traction.	
Maximum working slope	X-1.5°,Y-2°
Drive speeds	
Stowed, maximum	4.0km/h
Platform raised,	0.8km/h
Floor loading information	
Tire load, maximum	450kg
Tire contact pressure	14.3kg/cm^2 1396.5kPa
Occupied floor pressure	676.4kg/m^2 6.6kPa

Note: Floor loading information is approximate and does not incorporate different option configurations. It should be used only with adequate safety factors.

Continuous improvement of our products is a DINGLI policy. Product specifications are subject to change without notice or obligation.

Control Panel

Power Unit Control Station

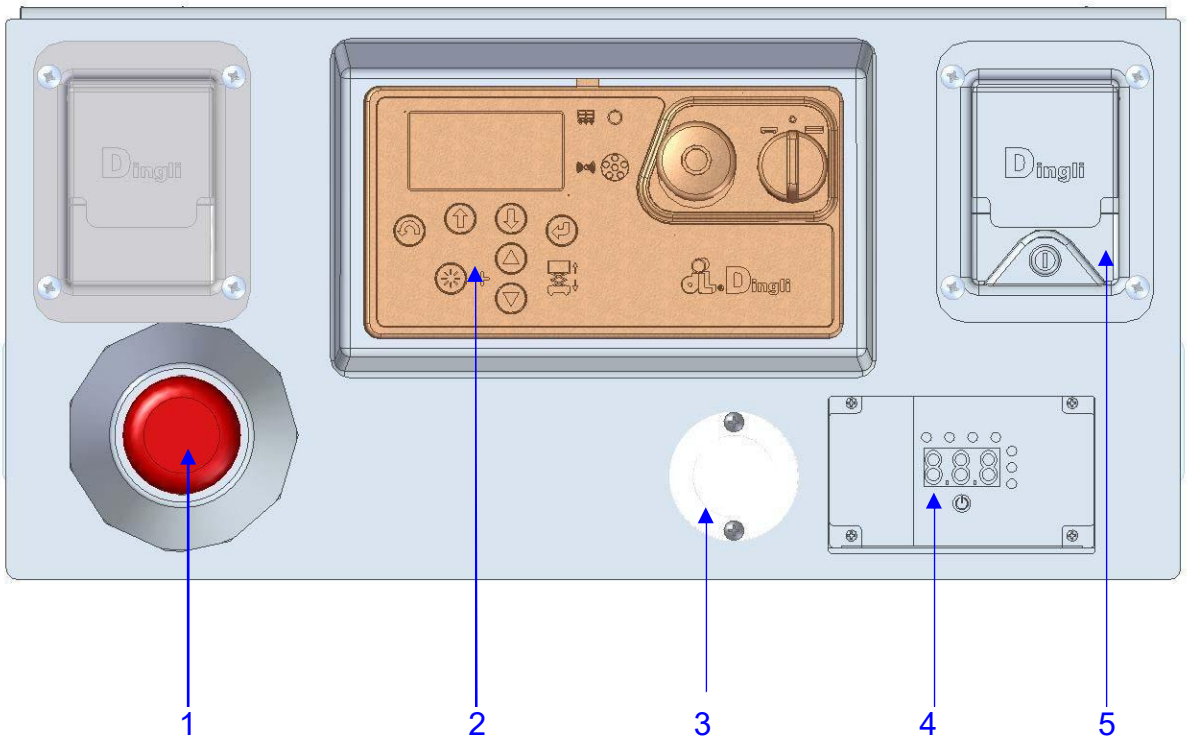

1 Emergency Stop Button

In the event of an emergency involving the battery, or if maintenance is being performed on the power unit, push or kick in Emergency Stop Button to cut off power.

2 Ground Control Panel

3 Battery Charger plug

4 Charger Panel

5 Lock

Ground Control Panel

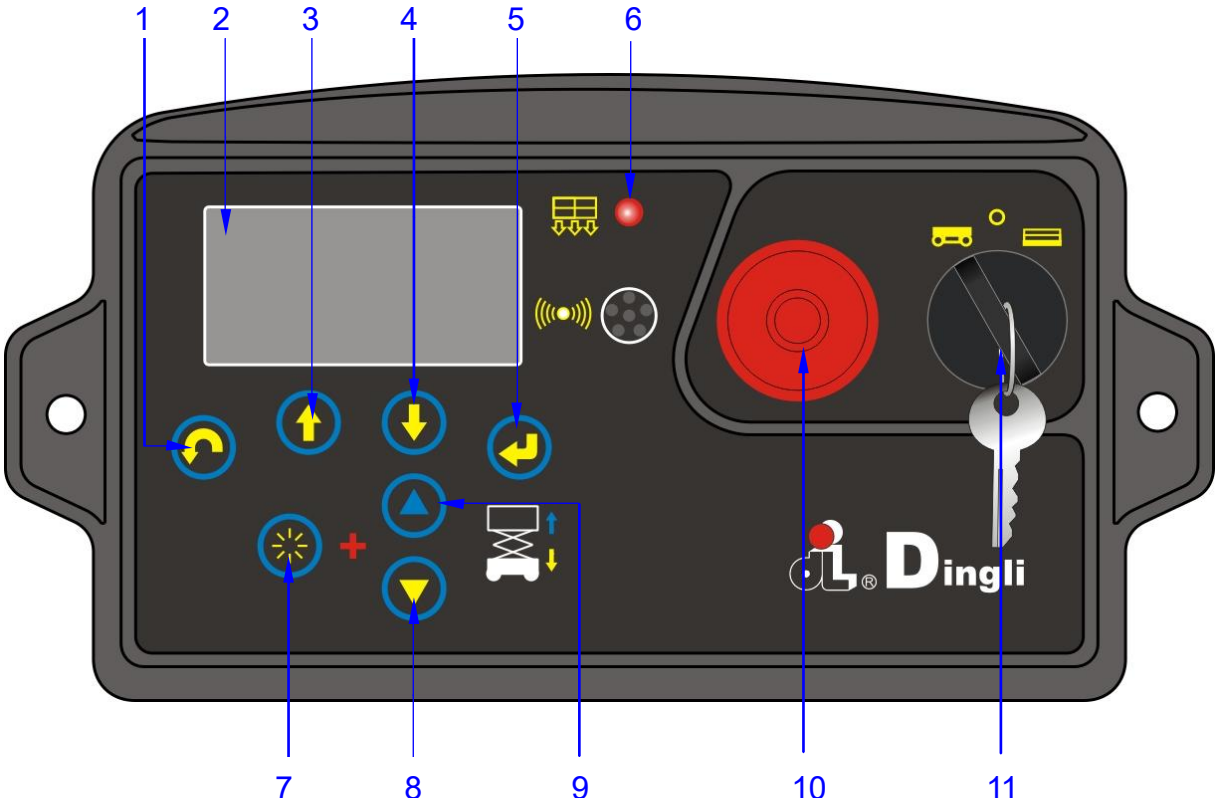

1 Menu escape button

2 LED readout screen

3 Menu up button

4 Menu down button

5 Menu enter button

6 Overload indicator light

7 Function enable button

8.. Platform down button

9 Platform up button

10 Red Emergency Stop button

Push in the red Emergency Stop button to the off position to stop all functions. Pull out the red Emergency Stop button to the on position to operate the machine.

11 Key switch

Turn the key switch to the platform position and the platform controls will operate. Turn the key switch to the off position and the machine will be off. Turn the key switch to the base position and the ground controls will operate.

Control Panel

Platform Control Panel

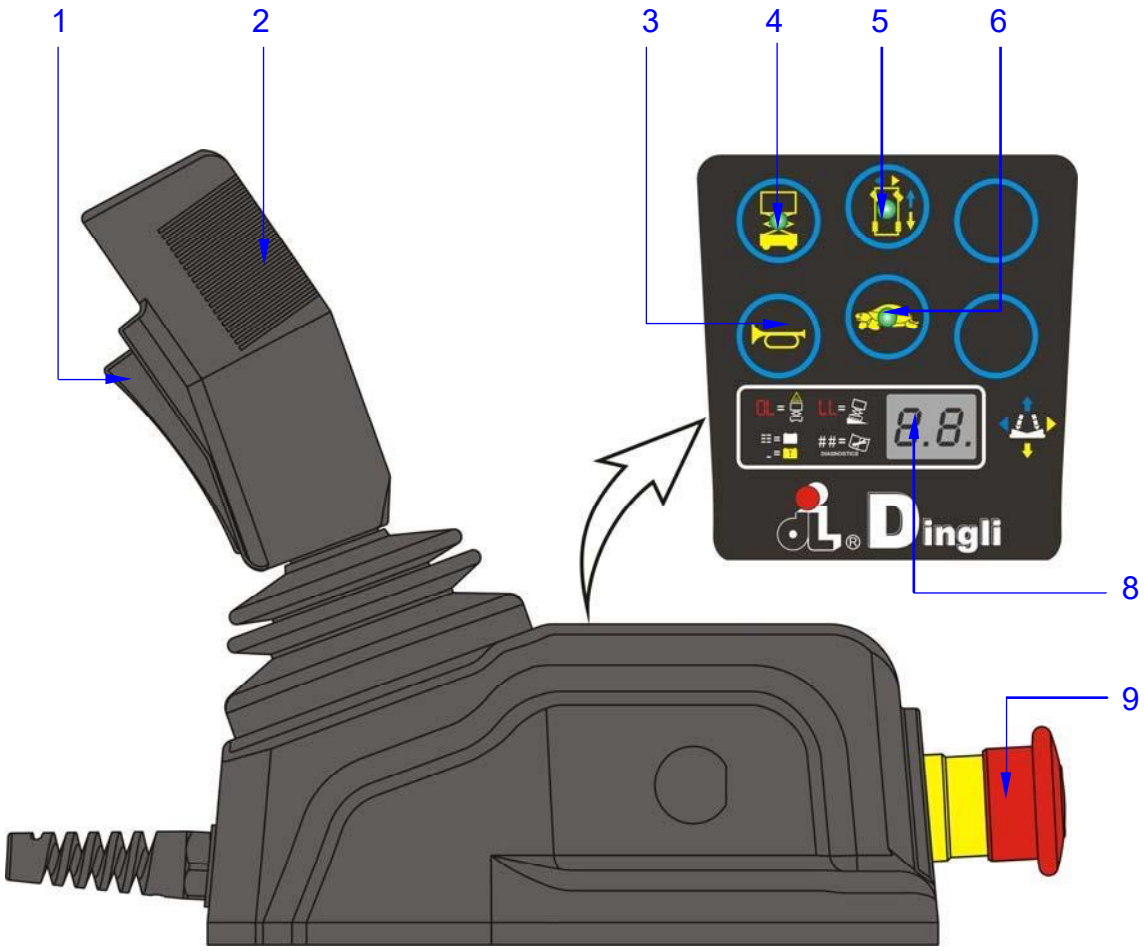

1	Function enable switch	5	Drive function select button
2	Proportional control handle	6	Drive speed button
3	Horn button	7	LED readout screen
4	Lift function select button	8	Red Emergency Stop button

Platform Control Panel

1 Function enable switch

Press and hold the function enable switch to enable the drive/lift function.

2 Proportional control handle

Function enable switch for lift and drive functions

Lift function: Press and hold the function enable switch to enable the lift function on the platform control handle. Move the control handle in the direction indicated by the blue arrow and the platform will raise. Move the control handle in the direction indicated by the yellow arrow and the platform will lower. The descent alarm should sound while the platform is lowering.

Drive function: Press and hold the function enable switch to enable the drive function on the platform control handle. Move the control handle in the direction indicated by the blue up arrow on the control panel and the machine will move in the direction that the blue arrow points. Move the control handle in the direction indicated by the yellow down arrow on the control panel and the machine will move in the direction that the yellow arrow points.

Press and hold the function enable switch to enable the drive function on the platform control handle. Move the control handle in the direction indicated by the blue left arrow on the control panel and the machine will turn to the lift direction that the blue arrow points. Move the control handle in the direction indicated by the yellow right arrow on the control panel and the machine will turn to right direction that the yellow arrow points.

3 Horn Button

Push the horn button and the horn will sound. Release the horn button and the horn will stop.

4 Lift function select button

Press this button to activate the lift function.

5 Drive function select button

Press this button to activate the drive function.

6 Drive speed button

Press this button to activate the slow or fast drive function.

7 LED readout screen

Diagnostic readout and battery charge indicator.

8 Red Emergency Stop button

Push in the red Emergency Stop button to the off position to stop all functions. Pull out the red Emergency Stop button to the on position to operate the machine.

Pre-operation Inspection



Do Not Operate Unless:

☑ You learn and practice the principles of safe machine operation contained in this operator's manual.

1 Avoid hazardous situations.

2 Always perform a pre-operation inspection.

Know and understand the pre-operation inspection before going on to the next section.

3 Inspect the workplace.

4 Always perform function tests prior to use.

5 Only use the machine as it was intended.

Fundamentals

It is the responsibility of the operator to perform a pre-operation inspection and routine maintenance.

The pre-operation inspection is a visual inspection performed by the operator prior to each work shift. The inspection is designed to discover if anything is apparently wrong with a machine before the operator performs the function tests.

The pre-operation inspection also serves to determine if routine maintenance procedures are required. Only routine maintenance items specified in this manual may be performed by the operator.

Refer to the list on the next page and check each of the items.

If damage or any unauthorized variation from factory delivered condition is discovered, the machine must be tagged and removed from service.

Repairs to the machine may only be made by a qualified service technician, according to the manufacturer's specifications. After repairs are completed, the operator must perform a pre-operation inspection again before going on to the function tests.

Scheduled maintenance inspections shall be performed by qualified service technicians, according to the manufacturer's specifications and the manual.

Pre-operation Inspection

- ☐ Be sure that the operator's manual are complete, legible and in the storage container located in the platform.
- ☐ Be sure that all decals are legible and in place. See Decals section.
- ☐ Check for hydraulic oil leaks and proper oil level. Add oil if needed. See Maintenance section.
- ☐ Check for battery fluid leaks and proper fluid level. Add distilled water if needed. See Maintenance section.

Check the following components or areas for damage, improperly installed or missing parts and unauthorized modifications:

- ☐ Electrical components, wiring and electrical cables
- ☐ Hydraulic hoses, fittings, cylinders and manifolds
- ☐ Battery pack and connections
- ☐ Drive motors
- ☐ Tires and wheels
- ☐ Limit switches, alarms and horn
- ☐ Nuts, bolts and other fasteners
- ☐ Platform overload components
- ☐ Platform entry gate
- ☐ Beacon and alarms
- ☐ Platform control

Check entire machine for:

- ☐ Cracks in welds or structural components
- ☐ Dents or damage to machine
- ☐ Be sure that all structural and other critical components are present and all associated fasteners and pins are in place and properly tightened

Workplace Inspection



Do Not Operate Unless:

☑ You learn and practice the principles of safe machine operation contained in this operator's manual.

1 Avoid hazardous situations.

2 Always perform a pre-operation inspection.

3 Inspect the workplace.

Know and understand the workplace inspection before going on to the next section.

4 Always perform function tests prior to use.

5 Only use the machine as it was intended.

Fundamentals

The workplace inspection helps the operator determine if the workplace is suitable for safe machine operation. It should be performed by the operator prior to moving the machine to the workplace.

It is the operator's responsibility to read and remember the workplace hazards, then watch for and avoid them while moving, setting up and operating the machine.

Workplace Inspection

Be aware of and avoid the following hazardous situations:

- Drop-offs or holes
- Bumps, floor obstructions or debris
- Sloped surfaces
- Unstable or slippery surfaces
- Overhead obstructions and high voltage conductors
- Hazardous locations
- Inadequate surface support to withstand all load forces imposed by the machine
- The presence of unauthorized personnel
- Other possible unsafe conditions

Function Tests



Do Not Operate Unless:

☑ You learn and practice the principles of safe machine operation contained in this operator's manual.

1 Avoid hazardous situations.

2 Always perform a pre-operation inspection.

3 Inspect the workplace.

4 Always perform function tests prior to use.

Know and understand the function tests before going on to the next section.

5 Only use the machine as it was intended.

Fundamentals

The function tests are designed to discover any malfunctions before the machine is put into service.

The operator must follow the step-by-step instructions to test all machine functions.

A malfunctioning machine must never be used. If malfunctions are discovered, the machine must be tagged and removed from service. Repairs to the machine may only be made by a qualified service technician, according to the manufacturer's specifications.

After repairs are completed, the operator must perform a pre-operation inspection and function tests again before putting the machine into service.

Function Tests

1 Select a test area that is firm, level and free of obstruction.

2 Be sure the battery pack is connected.

3 Turn the main power switch to "on" position.

At the Ground Controls

4 Pull out the platform and ground red Emergency Stop buttons to the on position.

5 Turn the key switch to ground control.

6 Observe the diagnostic LED readout on the ECU window.

⊙ Result: The LED should look like the picture at right.



Test Emergency Stop

7 Push in the ground red Emergency Stop button to the off position.

⊙ Result: No functions should operate.

8 Pull out the red Emergency Stop button to the on position.

Test Up/Down Functions

A buzzer with different sound frequency is controlled in central system. The descent alarm sounds at 60 beeps per minute. The alarm that goes off when the machine is not level sounds at 150 beeps per minute. An optional automotive-style horn is also available.

9 Turn the key switch to off or platform position.

10 Move up and hold the platform up / down switch.

⊙ Result: No function should operate.

11 Turn the key switch to ground control position.

12 Move up and hold the platform up / down switch.

⊙ Result: The platform should raise.

13 Move down and hold the platform up / down switch.

⊙ Result: The platform should lower to end. The descent alarm should sound while the platform is lowering.

Test the Emergency Lowering

14 Activate the up function and raise the platform approximately 0.6 m.

15 Pull the emergency lowering knob.

⊙ Result: The platform should lower. The descent alarm will not sound.

16 Turn the key switch to platform control.

At the Platform Controls

Test Emergency Stop

17 Push in the platform red Emergency Stop button to the off position.

⊙ Result: No functions should operate.

18 Pull the red Emergency Stop button out to the on position.

⊙ Result: The LED indicator light should come on.

Test the Horn

19 Push the horn button.

⊙ Result: The horn should sound.

Test Function Enable and Up/Down Functions

20 Do not hold the function enable switch on the control handle.

21 Slowly move the control handle in the direction indicated by the blue arrow, then

in the direction indicated by the yellow arrow.

⊙ Result: No functions should operate.

22 Press the lift function select button.

23 Press and hold the function enable switch on the control handle.

24 Slowly move the control handle in the direction indicated by the blue arrow.

⊙ Result: The platform should raise.

25 Release the control handle.

⊙ Result: The platform should stop raising.

26 Press and hold the function enable switch. Slowly move the control handle in the direction indicated by the yellow arrow.

⊙ Result: The platform should lower. The descent alarm should sound while the platform is lowering.

Test the Steering

Note: When performing the steer and drive function tests, stand in the platform facing the steer end of the machine.

27 Press the drive function select switch.

28 Press and hold the function enable switch on the control handle.

29 Slowly move the control handle in the direction identified by the blue left arrow on the control panel.

⊙ Result: The machine should turn in the direction that the blue left arrow points on the control panel.

30 Slowly move in the direction identified by the yellow right arrow on the control panel.

⊙ Result: The machine should turn in the direction that the yellow right arrow points on the control panel.

Test Drive and Braking

31 Press and hold the function enable switch on the control handle.

32 Slowly move the control handle in the direction indicated by the blue up arrow on the control panel until the machine begins to move, then return the handle to the center position.

⊙ Result: The machine should move in the direction that the blue up arrow points on the control panel, then come to an abrupt stop.

33 Press and hold the function enable switch on the control handle.

34 Slowly move the control handle in the direction indicated by the yellow down arrow on the control panel until the machine begins to move, then return the handle to the center position.

⊙ Result: The machine should move in the direction that the yellow down arrow points on the control panel, then come to an abrupt stop.

Note: The brakes must be able to hold the machine on any slope it is able to climb.

Test Limited Drive Speed

35 Press the lift function enable switch. Raise the platform approximately 0.25 m from the ground.

36 Press and hold the function enable switch on the control handle.

37 Slowly move the control handle to the full drive position.

⊙ Result: The maximum achievable drive speed with the platform raised should not exceed 10 sec.

⌑ Result: If the drive speed with the platform raised exceeds 10 sec., immediately tag and remove the machine from service.

Function Tests

Test the Tilt Sensor Operation

Note: Perform this test from the ground with the platform controller. Do not stand in the platform.

38 Fully lower the platform.

39 Place a 2×20 or similar piece of wood under both wheels on one side and drive the machine up onto them.

40 Raise the platform at least 0.6 m.

⊙ Result: The platform should stop and the tilt alarm will sound at 150 beeps per minute.

41 Move the drive control handle in the direction indicated by the blue up arrow, then move the drive control handle in the direction indicated by the white down arrow.

⊙ Result: The drive function should not work in either direction.

42 Lower the platform and drive the machine off the block.



Do Not Operate Unless:

☑ You learn and practice the principles of safe machine operation contained in this operator's manual.

1 Avoid hazardous situations.

2 Always perform a pre-operation inspection.

3 Inspect the workplace.

4 Always perform function tests prior to use.

5 Only use the machine as it was intended.

Fundamentals

This machine is a self-propelled hydraulic lift equipped with a work platform. Vibrations emitted by these machines are not hazardous to an operator in the work platform. The machine can be used to position personnel with their tools and supplies at position above ground level and can be used to reach work areas located above and over machinery or equipment.

A full and detailed implementation of EN ISO 13849-1/2 is correctly applied on our MEWP design. SISTEMA, a software tool for PL Calculation Tool, is also used to perform some relatively straightforward calculations on subsystem to determine the overall PL of the system. Reliability data, diagnostic coverage [DC], the system architecture [Category], common cause failure and, where relevant, requirements for software are used to assess the PL to comply with PLr of SRP/CS in Clause 5.11 of EN 280.

The Operating Instructions section provides instructions for each aspect of machine operation.

It is the operator's responsibility to follow all the safety rules and instructions in the operator's, safety and responsibilities manuals.

Using the machine for anything other than lifting personnel, along with their tools and materials, to an aerial work site is unsafe and dangerous.

Only trained and authorized personnel should be permitted to operate a machine. If more than one operator is expected to use a machine at different times in the same work shift, they must all be qualified operators and are all expected to follow all safety rules and instructions in the operator's, safety and responsibilities manuals. That means every new operator should perform a pre-operation inspection, function tests, and a workplace inspection before using the machine.

Operating Instructions

Operation from Ground

1 Turn the key switch to ground control.

2 Pull out both ground and platform red Emergency Stop buttons to the on position.

Using the platform

1 Gates are spring loaded – to enter platform push in on gates.

2 Step onto operator platform and allow gates to close.

3 Prior to exiting the lift, make sure it is fully lowered. If the lift is not completely lowered an alarm will sound. Lift must be fully lowered before exiting.

4 Turn forward, watch your step, and carefully step to the ground.

5 Remember the gates are spring loaded – keep a hand on the gate to avoid a sudden swinging motion.

⚠WARNING Do not attempt to raise the platform unless both of the floor locks are properly engaged and machine is on a smooth, firm, level surface.

⚠WARNING Do not attempt to raise the platform until gate closed properly.

⚠WARNING Before and while raising the platform, check clearances above and around platform and mast to ensure adequate clearance from surrounding objects and personnel.

⚠CAUTION Gate is spring loaded – hold on to gate to avoid sudden swinging motion.

Side guard rail operation

In order to reach the stock, you will need to lift the side guard rails. Release the latch and pivot the inner rail (adjacent to the racking) up and out of the way. The outer rail (toward the aisle) should remain closed at all times.



Locked



Unlocked



Side rail closed



Side rail open

Raising / Lowering Platform

At the Ground Control

Pull out the platform and ground red Emergency Stop buttons to the on position. Turn the key switch to ground control. Move up and hold the platform up / down switch. The platform will be lifting; Move down and hold the platform up / down switch. The platform will come down.

At the Platform Control

Press the lift function select button. Press and hold the function enable switch on the control handle. Slowly move the control handle in the direction indicated by the blue arrow.

The platform should raise.

Press and hold the function enable switch. Slowly move the control handle in the direction indicated by the yellow arrow. The platform should lower. The descent alarm should sound while the platform is lowering.

Emergency Stop

Push in the Red Emergency Stop button to the off position at the ground controls or the platform controls to stop all machine functions.

Repair any function that operates when either Red Emergency Stop button is pushed in.

Emergency Lowering

1 Pull the emergency lowering knob.

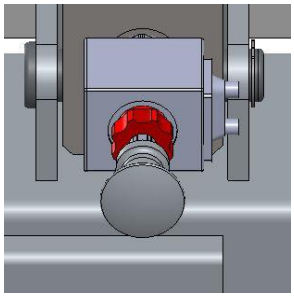

Safety features (if equipped)

Sight and sound

When the lift is descending an alarm will sound and a warning light will flash (to warn the hearing impaired). The alarm will also sound if the safety sensing system has been tripped.

Safety Sensing System

The lift is equipped with a detection system which will disable the lift upon any intrusion into a safety zone. The system activates when the lift is in the raised position and the controls are actuated to descend. If an intrusion is detected, an alarm will sound and the lift will not descend. The system will reset automatically after five seconds or the operator can restart it manually by turning the lift off and back on using the emergency stop on the PCU.

⚠WARNING When the sensor is reset while the lift is raised more than 0.6 m, the operator must check the top of the base for people or objects.

⚠WARNING Before descending, look down through deck to ensure area below is clear of obstructions and people. Continue to monitor the area throughout your descent.

To Steer

1 Press the drive function select button.

2 Press and hold the function enable switch on the control handle.

3 Slowly move the control handle left or right to turn the machine.

To Drive

1 Press the drive function select button.

2 Press and hold the function enable switch on the control handle.

3 Increase speed: Slowly move the control handle off center.

Decrease speed: Slowly move the control handle toward center.

Stop: Return the control handle to center or release the function enable switch.

Use the color-coded direction arrows on the platform controls and on the platform to identify the direction the machine will travel.

Machine travel speed is restricted when the platform is raised.

Battery condition will affect machine performance. Machine drive speed and function speed will drop when the battery level indicator is flashing.

Operating Instructions

To reduce drive speed

The drive controls can operate in two different drive speed modes. When the drive speed button light is on, slow drive speed mode is active. When the button light is off, fast drive speed mode is active.

Press the drive speed button to select the desired drive speed.

Operation from Ground with Controller

Maintain safe distances between operator, machine and fixed objects.

Be aware of the direction the machine will travel when using the controller.

Battery Level Indicator



Full Low

Use the LED diagnostic readout to determine the battery level.

Stock platform

The stock platform is to be used only for materials. At no time should it be used to support personnel.

Remember – slide. Don't' lift

To load or unload material, align the opening of the merchandise deck with the product. Raise the lift until the top of the stock platform is level with the stock you wish to move. Whenever possible, slide merchandise on and off racking. If you need to lift merchandise, please remember to use good lifting mechanics.

PROCEDURE IF CHAIN SLACK DECTECTOR ALARM CODE 72, IS SHOWN ON PCU AND THE LIFT WILL NOT LOWER

When lowering the lift, the operators compartment must be kept clear of any obstruction that might hang up the deck during decent. It is also possible uneven stress on platform can cause the machine to malfunction when lowering. If either of these situations occur, the operator will hear an alarm and code error code 72 will show. The chain slack detectors will disable the down function. The following procedures must be used to resolve this issue:

RE-SETTING TO LOWER PLATFORM

1. **DO NOT ATTEMPT TO USE THE MANUAL LOWERING VALVE. Raise the platform and reposition the lift to an area where you are sure you are free from any obstruction.** Remember you may not be able to see an obstruction below the deck so after you raise the deck **move the lift to insure you are clear.** Once the lift has been raised the chain safety switches will reset automatically, and Lowering functions will again be operational. Try to lower the platform. If the platform can be fully lowered, exit the platform. If you can verify the deck was hung up on something test it using floor controls. Raise the lift and lower it completely to insure no damage if you are not sure the unit has not been damaged or is working properly, take the machine out of service. Contact a professional service person so the lift can be evaluated. **DO NOT** attempt to use the machine again until it has been properly checked and placed back in service by a professional service person.

IF RE-SETTING LOWERING FUNCTION DOES NOT RESOLVE THE PROBLEM

2. If Reset procedure in Step 1 above does not allow the platform to descend properly, the alarm will sound again. **Do not attempt to continue lowering**. Ask for ground support from a nearby person. Advise an associate or manager to operate the Manual Lowering Valve on the base of the machine. **WHEN OPERATING THE MANUAL LOWERING VALVE LOOK UP AND INSURE THE CHAIN DOES NOT CONTINUE TO SLACKEN, IF IT DOES STOP IMMEDIATELY RAISE THE LIFT UNTIL THE SLACK IS OUT OF THE CHAIN, EXIT THE UNIT IN THE RAISED POSITION USING A LADDER OR ORDER PICKER.** If the platform can descend to the ground, exit the platform and take the machine out of service. Contact a professional service person so the lift can be evaluated. **DO NOT** attempt to use the machine again until it has been properly checked and placed back in service by a professional service person.

How to Use the Safety Support During Maintenance

1 Operate the ground control panel, and lift the manned platform to a height of 1.35m above the ground.

2 Lift the safety support, rotate and place it in the inside slot.

3 Slow lowering the platform to full contact with the safety support.

⚠ DANGER Engage all safety support before performing maintenance or repair.

⚠ DANGER Don't engage the safety support unless unload the platform.

Operating Instructions

Error indicator readout



The LED readout screen displays fault codes that provide information about the machine operating status and about malfunctions. The fault codes listed in the following charts describe malfunctions and can aid in troubleshooting the machine by pinpointing the area or component affected.

List of Fault Codes

Display	Description	Lift Reaction
02	System Communication Fault	Disables All Motion
03	Invalid Option Setting Fault	Disables All Motion
10	MC Communication Fault	Disables All Motion
12	Chassis Up or Down Switch ON	Disable Chassis Control
13	Battery Low Voltage Fault	Disables All Motion
23	Lift Up Coil Fault	Disable Lifting and Driving
24	Lift Down Coil fault	Disable Lifting and Driving
25	Left Brake Coil Fault	Disable Lifting and Driving
26	Right Brake Coil Fault	Disable Lifting and Driving
27	Pressure Sensor 2 Fault	Disable Lifting and Driving
46	Platform Enable Button ON	Disable Platform Control
47	Joystick Not In Neutral	Drive speed limit
54	Pressure Sensor 1 Fault	Disables All Motion
OL	Overload	Disable All Motion
58	Pothole	Disable Lifting and Driving
59	HIGH POSTION LIMIT	Disable Lifting
61	LOW POSTION LIMIT	Warning Only
LL	Machine Inclined	Disable Lifting and Driving
66	BATTERY LOW	Disable Lifting and Drive speed limit
67	OBSTACLE AT BELOW	Disable Down
68	DOOR OPEN	Disable Lifting and Driving
70	POTHOLE FAULT	Disable Lifting and Driving

Display	Description	Lift Reaction
72	CHAIN LOOSE	Disable Down and Driving
88	TM OVERLOAD M1	Warning Only
89	TM OVERLOAD M2	Warning Only
90	TM1 PCB HOT	Warning Only
91	TM1 RADIATOR HOT	Warning Only
92	TM PARA. OVER LIMIT	Warning Only
93	TM NO PARAMETER	Warning Only
94	TM OVERLOAD PUMP	Warning Only
95	EMPTY CALIBRATION NOT DONE	Warning Only
96	LOAD CALIBRATION NOT DONE	Warning Only
120	KEY SWITCH INPUT CHECK FAULT	Disables All Motion
201	Pump Current Offset	Disables All Motion
202	Trac1 Current Offset	Disables All Motion
203	Trac2 Current Offset	Disables All Motion
204	TM Load HW Para.	Disables All Motion
205	TM Load Parameter	Disables All Motion
210	TM Power Over Range	Disables All Motion
211	TM Power Relay Stuck	Disables All Motion
212	TM Precharege Undone	Disables All Motion
213	TM Power Relay Open	Disables All Motion
220	Pump Over Current	Disables All Motion
221	Trac1 Over Current	Disables All Motion
222	Trac2 Over Current	Disables All Motion
223	TM CapacitorOverVolt	Disables All Motion
224	TM CapacitorLowVolt	Disables All Motion
225	TM High Temp PCB	Disables All Motion
226	TM HighTemp Radiator	Disables All Motion

Operating Instructions

Display	Description	Lift Reaction
227	TM OUT1 Over Current	Disables All Motion
228	TM OUT2 Over Current	Disables All Motion
229	TM OUT3 Over Current	Disables All Motion
230	TM WDO Error	Disables All Motion
231	TM WDO Validity Err	Disables All Motion
232	TM Pump Open	Disables All Motion
233	Tractor M1 Open	Disables All Motion
234	Tractor M2 Open	Disables All Motion
235	Tractor M1 Wiring	Disables All Motion
236	Tractor M2 Wiring	Disables All Motion
237	Field Open Circuit	Disables All Motion
238	Field Wiring Error	Disables All Motion
239	Battery Under Voltage	Disables All Motion
240	Field Over Current	Disables All Motion
242	Field Current Offset	Disables All Motion
318	RELAYO OPEN CIRCUIT	Disables All Motion
319	RELAYO SHORT CIRCUIT	Disables All Motion

For more information, please consult the appropriate DINGLI Service Dept.



Battery and Charger Instructions

Observe and Obey:

☑ Do not use an external charger or booster battery.

☑ Charge the battery in a well-ventilated area.

☑ Use proper AC input voltage for charging as indicated on the charger.

☑ Use only a Dingli authorized battery and charger.

To Charge Battery

1 Be sure the battery is connected before charging.

2 Open the battery compartment. The compartment should remain open for the entire charging cycle.

Maintenance - free battery

3 Connect the battery charger to a grounded AC circuit.

4 The charger will indicate when the battery is fully charged.

Transport and Lifting Instructions



Observe and Obey:

☑ Common sense and planning must be applied to control the movement of the machine when lifting it with a crane or forklift.

☑ The transport vehicle must be parked on a level surface.

☑ The transport vehicle must be secured to prevent rolling while the machine is being loaded.

☑ Be sure the vehicle capacity, loading surfaces and chains or straps are sufficient to withstand the machine weight. See the serial label for the machine weight.

☑ The machine must be on a level surface or secured before releasing the brakes.

Brake Release Operation

1 Chock the wheels to prevent the machine from rolling.

2 Pull out the red Emergency Stop button on both the ground and platform controls to the on position. Platform down to the bottom, we must ensure the lower limit position switch activation.

3 Press and hold lift switch to "down" position in ground control, Keep this state 5 to 10 seconds. Next turn on the key switch to the "Ground" position. The brake will be released after Alarm alerts.

4 If you want to close the brake release, just turn off the key switch in "ground" position.

Towing the Model is not recommended. If the machine must be towed, do not exceed 4.0 km/h.

After the machine is loaded

1 Push in both ground and platform red Emergency Stop buttons to the off position.

2 Turn the key switch to the off position.

3 Chock the wheels to prevent the machine from rolling.

Securing to Truck or Trailer for Transit

Always chock the machine wheels in preparation for transport.

Turn the key switch to the off position and remove the key before transporting.

Inspect the entire machine for loose or unsecured items.

Securing the Chassis

Use the tie-down points on the chassis for anchoring down to the transport surface.

Use a minimum of four chains or straps.

Use chains or straps of ample load capacity.

Adjust the rigging to prevent damage to the chains.

Loading the Machine with a Crane

Use the lifting eye mounted on the side mast column.

Make sure the mast is fully lowered.

Inspect the machine and remove any loose or unsecured items.

Attach the rigging only to the designated lifting points on the machine. There are two lifting points on the top of the mast.

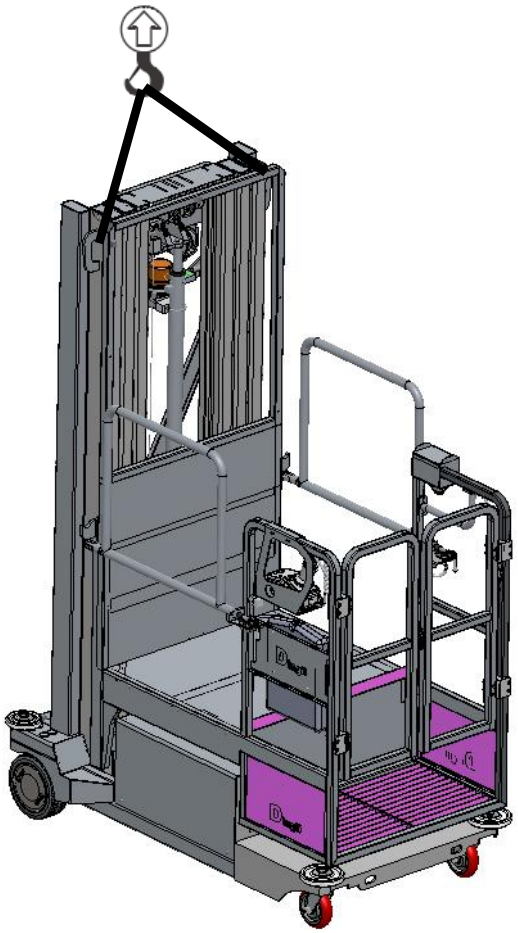

Storage procedure

The machine should be stored as bellow if it should not be used for long period.

The environment temperature should be within -20℃~40℃;

The environment humidity ≤ 90%.

1 The machine should be stored indoors condition and the ground should be firm and level. If stored outdoors the machine should be covered to prevent the water and dust.

2 Ensure the machine has been cleaned and functional, before putting in storage. Repair or maintain it if necessary.

3 Store the machine in suitable position providing easy access

4 How to store the batteries

- The batteries should be removed from the machine and be stored in a place where it is dry and well ventilated. Keep the batteries clean and ensure nothing is placed on top of the batteries.
- The batteries connection should be connected in this order. Disconnect the wire from the negative pole first, then disconnect the wires from the positive pole.
- The batteries should be connected in this order. First connect the positive power wires with the positive pole, then connect the negative cable line to the negative pole.
- While in storage the batteries should be charged every month.

5 Rust protection

- Inspect the paint before the machine is stored into the storage. Repaint the machine partly all completely against the damage.

The machine cannot be used until it has been inspected and maintained according to the daily check procedure.

Maintenance



Observe and Obey:

☑ Only routine maintenance items specified in this manual shall be performed by the operator.

☑ Scheduled maintenance inspections shall be completed by qualified service technicians, according to the manufacturer's specifications and the requirements specified in this manual.

Maintenance Symbols Legend

NOTICE The following symbols have been used in this manual to help communicate the intent of the instructions. When one or more of the symbols appear at the beginning of a maintenance procedure, it conveys the meaning below.

 Indicates that tools will be required to perform this procedure.

 Indicates that new parts will be required to perform this procedure.

 Indicates that dealer service will be required to perform this procedure.

Pre-delivery Preparation Report

The pre-delivery preparation report contains checklists for each type of scheduled inspection.

Make copies of the Pre-delivery Preparation report to use for each inspection. Store completed forms as required.

Maintenance Schedule

There are five types of maintenance inspections that must be performed according to a schedule— daily, quarterly, semi-annually, annually, and two year. The Scheduled Maintenance Procedures Section and the Maintenance Inspection Report have been divided into five subsections—A, B, C, D, and E. Use the following chart to determine which group(s) of procedures are required to perform a scheduled inspection.

Inspection	Checklist
Daily or every 8 hours	A
Quarterly or every 250 hours	A+B
Semi-annually or every 500 hours	A+B+C
Annually or every 1000 hours	A+B+C+D
Unpredictable situation	E

Maintenance Inspection Report

The maintenance inspection report contains checklists for each type of scheduled inspection.

Make copies of the Maintenance Inspection Report to use for each inspection. Maintain completed forms for a minimum of 4 years or in compliance with your employer, jobsite and governmental regulations and requirements.

Pre-delivery Preparation Report

Fundamentals

It is the responsibility of the dealer to perform the Pre-delivery Preparation.

The Pre-delivery Preparation is performed prior to each delivery. The inspection is designed to discover if anything is wrong with a machine before it is put into service.

A damaged or modified machine must never be used. If damage or any variation from factory delivered condition is discovered, the machine must be tagged and removed from service.

Repairs to the machine may only be made by a qualified service technician, according to the manufacturer's specifications.

Scheduled maintenance inspections shall be performed by qualified service technicians, according to the manufacturer's specifications and the requirements listed in the responsibilities manual.

Instructions

Use the operator's manual on your machine.

The Pre-delivery Preparation consists of completing the Pre-operation Inspection, the Maintenance items and the Function Tests.

Use this form to record the results. Place a check in the appropriate box after each part is completed. Follow the instructions in the operator's manual.

If any inspection receives an N, remove the machine from service, repair and re-inspect it. After repair, place a check in the R box.

Legend

Y = yes, completed

N = no, unable to complete

R = repaired

Comments

Pre-Delivery Preparation	**Y**	**N**	**R**
Pre-operation inspection completed			
Maintenance items completed			
Function tests completed			

Model
Serial number
Date
Machine owner
Inspected by (print)
Inspector signature
Inspector title
Inspector company

Maintenance

Maintenance Inspection Report

Model
Serial number
Date
Hour meter
Machine owner
Inspected by (print)
Inspector signature
Inspector title
Inspector company

Instructions

• Make copies of this report to use for each inspection.

• Select the appropriate checklist(s) for the type of inspection to be performed.

☐	Daily or 8 hours Inspection:	A
☐	Quarterly or 250 hours Inspection:	A+ B
☐	Semi-annually or 500 hours Inspection:	A+B+C
☐	Annually or 1000 hours Inspection:	A+B+C+D
☐	Unpredictable situation	E

• Place a check in the appropriate box after each inspection procedure is completed.

• Use the step-by-step procedures in this section to learn how to perform these inspections.

• If any inspection receives an "N", tag and remove the machine from service, repair and re-inspect it. After repair, place a check in the "R' box.

Legend

Y = yes, acceptable
N = no, remove from service
R = repaired

Checklist A	**Y**	**N**	**R**
A-1 Inspect the manuals and decals			
A-2 Pre-operation inspection			
A-3 Check the Batteries			
A-4 Check the Hydraulic Oil Level			
A-5 Perform Function tests			
A-6 Check the Sequencing Cables			
A-7 Inspect the Lifting Chains and Idler Wheels			
Perform after 40 hours:			
A-8 30 day service			

Checklist B	**Y**	**N**	**R**
B-1 Electrical wiring			
B-2 Inspect the Lifting Chains			
B-3 Tires and wheels			
B-4 Clean and Lubricate the Mast			
B-5 Emergency stop			
B-6 Key switch			
B-7 Horn (if equipped)			
B-8 Drive brakes			
B-9 Drive speed - stowed			
B-10 Drive speed - raised			
B-11 Drive speed - slow			
B-12 Hydraulic oil analysis			
B-13 Tank venting system			
B-14 Test the down limit switches			
B-15 Test the Up Limit Switch			
B-16 Test the induction Switch of chain tightness			
B-17 Test the descending auxiliary device			

Checklist C	**Y**	**N**	**R**
C-1Platform overload (if equipped)			
C-2 Breather cap - models with optional oil			
C-3 Inspect and Lubricate the Casters			

Checklist D	**Y**	**N**	**R**
D-1 Hydraulic oil			

Checklist E	**Y**	**N**	**R**
E-1 Machine down faults			

Checklist A Procedures

A-1

Inspect the Manuals and Decals

Maintaining the operator's and safety manuals in good condition is essential to safe machine operation. Manuals are included with each machine and should be stored in the container provided in the platform. An illegible or missing manual will not provide safety and operational information necessary for a safe operating condition.

In addition, maintaining all of the safety and instructional decals in good condition is mandatory for safe machine operation. Decals alert operators and personnel to the many possible hazards associated with using this machine. They also provide users with operation and maintenance information. An illegible decal will fail to alert personnel of a procedure or hazard and could result in unsafe operating conditions.

1 Check to make sure that the manuals are present and complete in the storage container on the platform.

2 Examine the pages of manual to be sure that they are legible and in good condition.

⊙ Result: The operator manual is appropriate for the machine and the manual are legible and in good condition.

¤ Result: The operators manual is not appropriate for the machine or the manual is not in good condition or is illegible. Remove the machine from service until the manual is replaced.

3 Open the operator manual to the decals inspection section. Carefully and thoroughly inspect all decals on the machine for legibility and damage.

⊙ Result: The machine is equipped with all required decals, and all decals are legible and in good condition.

¤ Result: The machine is not equipped with all required decals, or one or more decals are illegible or in poor condition. Remove the machine from service until the decals are replaced.

4 Always return the manual to the storage container after use.

Note: Contact your authorized DINGLI distributor or DINGLI if replacement manuals or decals are needed.

Maintenance

A-2

Perform Pre-operation Inspection

Completing a Pre-operation Inspection is essential to safe machine operation. The Pre-operation Inspection is a visual inspection performed by the operator prior to each work shift. The inspection is designed to discover if anything is wrong with the machine before the operator performs the function tests. The Pre-operation Inspection also serves to determine if routine maintenance procedures are required.

Complete information to perform this procedure is available in the appropriate operator manual. Refer to the Operator Manual on your machine.

A-3

Check the Batteries



Proper battery condition is essential to good machine performance and operational safety. Improper fluid levels or damaged cables and connections can result in component damage and hazardous conditions.

⚠WARNING Electrocution hazard. Contact with hot or live circuits may result in death or serious injury. Remove all rings, watches and other jewelry.

⚠WARNING Bodily injury hazard. Batteries contain acid. Avoid spilling or contacting battery acid. Neutralize battery acid spills with baking soda and water.

1 Put on protective clothing and eye wear.

2 Be sure that the battery cable connections are tight and free of corrosion.

3 Remove the battery vent caps.

4 Check the battery acid level. If needed, replenish with distilled water to the bottom of the battery fill tube. Do not overfill.

5 Install the vent caps.

A-4

Check the Hydraulic Oil Level



Maintaining the hydraulic oil at the proper level is essential to machine operation. Improper hydraulic oil levels can damage hydraulic components. Daily checks allow the inspector to identify changes in oil level that might indicate the presence of hydraulic system problems.

NOTICE Perform this procedure with the platform in the stowed position and the motor off.

1 Remove the hydraulic oil dipstick (fill cap), wipe it clean and reinstall it.

2 Take the hydraulic oil dipstick out again, and check the oil level.

3 If the hydraulic oil level is too low and add new hydraulic oil to the prescribed level.

Hydraulic oil specifications

L-HV46

A-5

Perform Function Tests

Completing the function tests is essential to safe machine operation. Function tests are designed to discover any malfunctions before the machine is put into service. A malfunctioning machine must never be used. If malfunctions are discovered, the machine must be tagged and removed from service.

Complete information to perform this procedure is available in the appropriate operator manual. Refer to the Operator Manual on your machine.

Maintenance

A-6

Check the Sequencing Cables

Detection of damage to sequencing cables or components is essential for safe machine operation. An unsafe working condition exists if the sequencing components are damaged and do not operate smoothly. A daily check of the sequencing system allows the inspector to identify changes in the operating condition that might indicate damage.

⚠WARNING Bodily injury hazard. Batteries contain acid. Avoid spilling or contacting battery acid. Neutralize battery acid spills with baking soda and water.

Visually inspect the cables and components for the following:

- Frayed or broken wire strands
- Paint or foreign materials
- Broken or damaged pulleys
- Unusual or excessive pulley wear
- Split or cracked swage ends
- Cable ends are properly secured
- Mounting brackets are properly secured

A-7

Inspect the Lifting Chains and Idler Wheels

Maintaining the lifting chains and idler wheels in good condition is essential to safe machine operation. Failure to find and replace damaged chains or idler wheels could result in unsafe operating conditions and may cause component damage.

1 Raise the platform approximately 1.5 m.

2 Visually inspect the chains and idler wheels for the following:

- Excessive corrosion or contamination
- Broken or missing chain leafs and pins
- Tight or kinked joints in the chain
- Missing or damaged idler wheels and related components

3 Inspect the chain terminations to confirm that each termination has a lock nut.

A-8

Perform 30 Day Service



The 30 day maintenance procedure is a one time procedure to be performed after the first 30 days or 40 hours of usage. After this interval, refer to the maintenance tables for continued scheduled maintenance.

1 Perform the following maintenance procedures:

- B-4 Inspect the Tires, Wheels and Castle Nut Torque

Maintenance

Checklist B Procedures

B-1

Inspect the Electrical Wiring



DINGLI requires that this procedure be performed every 250 hours or quarterly, whichever comes first.

Maintaining electrical wiring in good condition is essential to safe operation and good machine performance. Failure to find and replace burnt, chafed, corroded or pinched wires could result in unsafe operating conditions and may cause component damage.

⚠WARNING Electrocution / burn hazard. Contact with electrically charged circuits could result in death or serious injury. Remove all rings, watches and other jewelry.

1 Inspect the underside of the chassis for damaged or missing ground strap(s).

2 Inspect the following areas for burnt, chafed, corroded and loose wires:

- Ground control panel
- Platform controls

3 Turn the key switch to ground control and pull out the red Emergency Stop button to the on position at both the ground and platform controls.

4 Raise the platform approximately 1.0m the ground.

5 Inspect the following areas for burnt, chafed, corroded, pinched and loose wires:

- ECU to platform controls
- Power to platform wiring

6 Lower the platform to the stowed position and turn the machine off.

B-2

Inspect the Lifting Chains



The chains running normally are essential to good machine performance and safe operation. Extremely dirty conditions may require that the chains be cleaned and lubricated more often.

The direct result of wearing the transmission chain is to stretch the total length of the chain. Measure the stretching rate of the used transmission chain by eye every three months. The mast connected to the elongated chain would be lower in position so that the top of each mast is obviously uneven in 'stored' position. It may lead to damage on guide roller if the problem is serious.

NOTICE Every link of the transmission chain is associated with three links of the masts.

1 Lower the platform to the stowed position.

2 Measure the maximum height of the machine.

⊙ Result: The machine should be no lower than specification.

⌑ Result: The machine should be lower than specification.

The following sketch shows the connection of the masts and the transmission chain.

3 When regulating the length of the chain, please select the mast that needs increasing its height. As shown in the sketch, regulating the nut tightly makes the last link of the mast move upwards. The dual nuts should be connected with each other tightly after regulating the length of the chain.

4 The same link of the mast is pulled by two chains and endures the raised weight loads at the same time. If one of the chains loses efficacy, the other will play an important safety role; therefore, try to make both chains as loose or tight as consistent each other when regulating the length of the chain. To test chain tension, press the two chains by hands to compare their tautness under lifting status.

⚠WARNING Make sure to use bracket is in place during maintenance.

B-3

Inspect the Tires and Wheels (including lock nut torque)



DINGLI requires that this procedure be performed every 250 hours or quarterly, whichever comes first.

Maintaining the tires and wheels in good condition is essential to safe operation and good performance. Tire and/or wheel failure could result in a machine tip-over. Component damage may also result if problems are not discovered and repaired in a timely fashion.

1 Check the tire surface and sidewalls for cuts, cracks, punctures and unusual wear.

2 Check each wheel for damage, bends and cracks.

Maintenance

B-4

Clean and Lubricate the Masts



Clean and properly lubricated masts are essential to good machine performance and safe operation. Extremely dirty conditions may require that the masts be cleaned and lubricated more often.

1 Raise the platform to the maximum height.

2 Visually inspect the inner and outer channels of the masts for debris or foreign material. If necessary, use a mild cleaning solvent to clean the masts.

3 The bearing between chain wheel with the shaft is lubricated with the calcium base grease in raising.

4 Lubricate the place between chain wheel with chain used grease gun.

5 Lubricate the lead rail with the calcium base grease in raising.

⚠WARNING This procedure will require the use of additional access equipment. Do not place ladders or scaffold on or against any part of the machine. Performing this procedure without the proper skills and tools may result in death or serious injury. Dealer service is strongly recommended.

B-5

Test the Emergency Stop

DINGLI requires that this procedure be performed every 250 hours or quarterly, whichever comes first.

A properly functioning Emergency Stop is essential for safe machine operation. An improperly operating red Emergency Stop button will fail to shut off power and stop all machine functions, resulting in a hazardous situation.

As a safety feature, selecting and operating the ground controls will override the platform controls, except the platform red Emergency Stop button.

1 Turn the key switch to ground control and pull out the red Emergency Stop button to the on position at both the ground and platform controls.

2 Push in the red Emergency Stop button at the ground controls to the off position.

⊙ Result: No machine functions should operate.

3 Turn the key switch to platform control and pull out the red Emergency Stop button to the on position at both the ground and platform controls.

4 Push down the red Emergency Stop button at the platform controls to the off position.

⊙ Result: No machine functions should operate.

Note: The red Emergency Stop button at the ground controls will stop all machine operation, even if the key switch is switched to platform control.

B-6

Test the Key Switch

DINGLI requires that this procedure be performed every 250 hours or quarterly, whichever comes first.

Proper key switch action and response is essential to safe machine operation. The machine can be operated from the ground or platform controls and the activation of one or the other is accomplished with the key switch. Failure of the key switch to activate the appropriate control panel could cause a hazardous operating situation.

Perform this procedure from the ground using the platform controls. Do not stand in the platform.

1 Pull out the red Emergency Stop button to the on position at both the ground and platform controls.

2 Turn the key switch to platform control.

3 Check the platform up/down function from the ground controls.

⊙ Result: The machine functions should not operate.

4 Turn the key switch to ground control.

5 Check the machine functions from the platform controls.

⊙ Result: The machine functions should not operate.

6 Turn the key switch to the off position.

⊙ Result: No function should operate.

B-7

Test the Buzzer-style Horn (if equipped)

DINGLI requires that this procedure be performed every 250 hours or quarterly, whichever comes first.

The horn is activated at the platform controls and sounds at the ground as a warning to ground personnel. An improperly functioning horn will prevent the operator from alerting ground personnel of hazards or unsafe conditions.

1 Turn the key switch to platform control and pull out the red Emergency Stop button to the on position at both the ground and platform controls.

2 Push down the horn button at the platform controls.

⊙ Result: The horn should sound.

Maintenance

B-8

Test the Drive Brakes

DINGLI requires that this procedure be performed every 250 hours or quarterly, whichever comes first.

Proper brake action is essential to safe machine operation. The drive brake function should operate smoothly, free of hesitation, jerking and unusual noise.
Hydraulically-released individual wheel brakes can appear to operate normally when not fully operational.

Perform this procedure with the machine on a firm level surface that is free of obstructions, with the platform extension deck fully retracted and the platform in the stowed position.

1 Mark a test line on the ground for reference.

2 Turn the key switch to platform control and pull out the red Emergency Stop button to the on position at both the ground and platform controls.

3 Lower the platform to the stowed position.

4 Press the drive function select button.

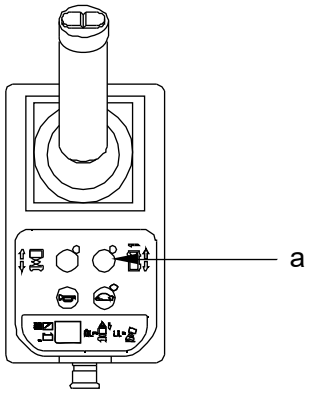

a drive function select button

5 Choose a point on the machine; i.e., contact patch of a tire, as a visual reference for use when crossing the test line.

6 Bring the machine to top drive speed before reaching the test line. Release the function enable switch or the joystick when your reference point on the machine crosses the test line.

7 Measure the distance between the test line and your machine reference point.

☉ Result: The machine stops within the specified braking distance. No action required.

☒ Result: The machine does not stop within the specified braking distance.

Note: The brakes must be able to hold the machine on any slope it is able to climb.

8 Replace the brakes and repeat this procedure beginning with step 1.

Braking distance, maximum	
High range on paved surface	61cm±30cm

B-9

Test the Drive Speed - Stowed Position

DINGLI requires that this procedure be performed every 250 hours or quarterly, whichever comes first.

Proper drive functions are essential to safe machine operation. The drive function should respond quickly and smoothly to operator control. Drive performance should also be free of hesitation, jerking and unusual noise over the entire proportionally controlled speed range.

Perform this procedure with the machine on a firm, level surface that is free of obstructions.

1 Create start and finish lines by marking two lines on the ground 12.2 m apart.

2 Turn the key switch to platform control and pull out the red Emergency Stop button to the on position at both the ground and platform controls.

3 Lower the platform to the stowed position.

4 Press the drive function select button.

5 Choose a point on the machine; i.e., contact patch of a tire, as a visual reference for use when crossing the start and finish lines.

6 Bring the machine to top drive speed before reaching the start line. Begin timing when your reference point on the machine crosses the start line.

7 Continue at full speed and note the time when your reference point on the machine passes over the finish line. The time is less than 11sec.

B-10

Test the Drive Speed - Raised Position

DINGLI requires that this procedure be performed every 250 hours or quarterly, whichever comes first.

Proper drive functions are essential to safe machine operation. The drive function should respond quickly and smoothly to operator control. Drive performance should also be free of hesitation, jerking and unusual noise over the entire proportionally controlled speed range.

Perform this procedure with the machine on a firm, level surface that is free of obstructions.

1 Create start and finish lines by marking two lines on the ground 12.2 m apart.

2 Turn the key switch to platform control and pull out the red Emergency Stop button to the on position at both the ground and platform controls.

3 Press the lift function select button.

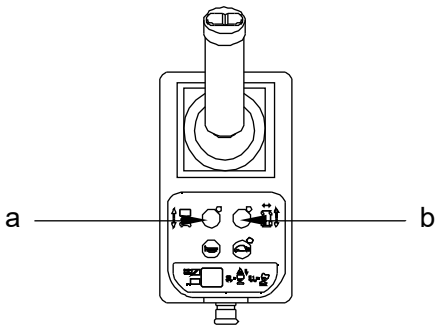

a lift function select button

b drive function select button

4 Press and hold the function enable switch on the joystick.

5 Raise the platform approximately 1.2 m from the ground.

6 Press the drive function select button.

7 Choose a point on the machine; i.e., contact patch of a tire, as a visual reference for use when crossing the start and finish lines.

8 Bring the machine to top drive speed before reaching the start line. Begin timing when your reference point on the machine crosses the start line.

9 Continue at full speed and note the time when your reference point on the machine passes over the finish line. The time is less than 55 sec.

B-11

Test the Slow Drive Speed

DINGLI requires that this procedure be performed every 250 hours or quarterly, whichever comes first.

Proper drive functions are essential to safe machine operation. The drive function should respond quickly and smoothly to operator control. Drive performance should also be free of hesitation, jerking and unusual noise over the entire proportionally controlled speed range.

Perform this procedure with the machine on a firm, level surface that is free of obstructions.

1 Create start and finish lines by marking two lines on the ground 12.2 m apart.

2 Turn the key switch to platform control and pull out the red Emergency Stop button to the on position at both the ground and platform controls.

3 Lower the platform to the stowed position.

4 Press the slow speed select button.

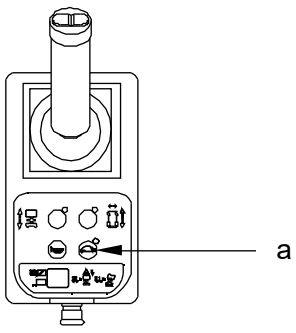

a slow speed select button

5 Choose a point on the machine; i.e., contact patch of a tire, as a visual reference for use when crossing the start and finish lines.

6 Bring the machine to top drive speed before reaching the start line. Begin timing when your reference point on the machine crosses the start line.

7 Continue at full speed and note the time when your reference point on the machine passes over the finish line. The time is less than 25 sec.

B-12

Perform Hydraulic Oil Analysis



DINGLI requires that this procedure be performed every 250 hours or quarterly, whichever comes first.

Replacement or testing of the hydraulic oil is essential for good machine performance and service life. Dirty oil may cause the machine to perform poorly and continued use may cause component damage. Extremely dirty conditions may require oil changes to be performed more often.

Replace the oil when it fails the test. See D-1, Test or Replace the Hydraulic Oil.

Maintenance

B-13

Inspect the Hydraulic Tank Cap Venting System

DINGLI requires that this procedure be performed quarterly or every 250 hours, whichever comes first. Perform this procedure more often if dusty conditions exist.

A free-breathing hydraulic tank cap is essential for good machine performance and service life. A dirty or clogged cap may cause the machine to perform poorly. Extremely dirty conditions may require that the cap be inspected more often.

1 Remove the breather cap from the hydraulic tank.

2 Check for proper venting.

☉ Result: Air passes through the breather cap.

☒ Result: If air does not pass through the cap, clean or replace the cap. Proceed to step 3.

Note: When checking for positive tank cap venting, air should pass freely through the cap.

3 Using a mild solvent, carefully wash the cap venting system. Dry using low pressure compressed air. Repeat step 2.

4 Install the breather cap onto the hydraulic tank.

B-14

Test the Down Limit Switch

DINGLI requires that this procedure be performed every 250 hours or quarterly, whichever comes first.

Maintaining the limit switches is essential to safe operation and good machine performance. Operating the machine with a faulty limit switch could result in reduced machine performance and a potentially unsafe operating condition.

Perform these procedures with the machine on a firm, level surface that is free of obstructions.

Perform this test from the ground with the platform controller.

1 Remove the platform controls from the platform.

2 Turn the key switch to platform control.

3 Press the drive speed button.

☉ Result the light will turn on. The machine is functioning properly.

☒ Result the light will turn off Replace the down limit switch.

4 Press the Lift function select button

5 Raise the platform 0.6 m.

6 Rotate the roller arm of the limit switch 90 degrees in an left direction. Activate the switch contacts.

☉ Result the drive speed button light will turn on when press the drive speed button. The machine is functioning properly.

☒ Result the drive speed button the light will turn off when press the drive speed button. Replace the down limit switch.

7 Lower the platform to the stowed position.

B-15

Test the Up Limit Switch



DINGLI requires that this procedure be performed every 250 hours or quarterly, whichever comes first.

Maintaining the limit switches is essential to safe operation and good machine performance.

Operating the machine with a faulty limit switch could result in reduced machine performance and a potentially unsafe operating condition.

Perform these procedures with the machine on a firm, level surface that is free of obstructions.

1 Turn the key switch to ground control.

2 While raising the platform from the ground controls, push the arm of the up limit switch towards the drive end of the machine to activate the limit switch.

☉ Result: The platform stops raising. The machine is functioning properly.

☒ Result: The platform continues to raise. Adjust or replace the up limit switch.

3 Lower the platform to the stowed position.

B-16

Test the induction Switch of chain tightness. (Chain slack detector)



Maintaining the induction switch is essential to safe operation and good machine performance.

Operating the machine with a faulty induction switches could result in reduced machine performance and a potentially unsafe operating condition.

Perform these procedures with the machine on a firm, level surface that is free of obstructions.

4 Activate the up function.

5 Raise platform, place the wood on the deck . Lower platform to contact the wood and slack chain.

☉ Result: The middle mast stops and the buzzer warns

☒ Result: The middle mast continues to lower. If appear this phenomenon, we must adjust the induction switch angle of swing arm.

Maintenance



Check method



The induction switch

B-17

Test the descending auxiliary device

DINGLI requires that this procedure be performed every 250 hours or quarterly, whichever comes first.

Maintaining the limit switches is essential to safe operation and good machine performance.

1 Test the function of descending auxiliary device, The platform should be fully raised and lowered about 2 times

2 When the platform is fully lowered, you can pull the wire rope halfway between the mast

⊙ Result: The wire rope can be moved back 25mm to 50mm. When you release your hand, the wire rope will be back to its original position. The machine is functioning properly.

⌑ Result: The wire rope cannot be pulled. Check the spring for damage. If damaged, replace immediately. Check the tightness of the fixed screw of wire rope. If it is too tight, adjust properly.

3 Check the surface of the wire rope.

⊙ Result: The surface of wire rope is intact. The machine is functioning properly.

⌑ Result: The wire rope have a fracture or surface abrasion, replace immediately

4 Check the surface of the roller.

⊙ Result: The surface of roller is intact. The machine is functioning properly.

⌑ Result: The roller is badly worn, replace immediately.

Checklist C Procedures

C-1

Test the Platform Overload System (if equipped)



DINGLI require that this procedure be performed every 500 hours or six months, whichever comes first OR when the machine fails to lift the maximum rated load.

Testing the platform overload system regularly is essential to safe machine operation. Continued use of an improperly operating platform overload system could result in the system not sensing an overloaded platform condition. Machine stability could be compromised resulting in the machine tipping over.

1 Turn the key switch to ground control

2 Loose the screw of the up limited switch. Remove the up limited switch

3 Fully raise the platform. Release the toggle switch.

⊙ Result: The alarm should sound. The machine is functioning properly.

⌑ Result: The alarm does not sound. Calibrate the platform overload system.

4 Install the up limited switch.

5 Fully raise the platform. Release the toggle switch.

⊙ Result: The alarm should not sound. The system is functioning correctly.

⌑ Result: The alarm sounds. The system is not functioning correctly. Troubleshoot the limit switch, limit switch wire harness or limit switch mount bracket OR the platform overload system needs to be calibrated.

6 Lower the platform to the stowed position.

C-2

Replace the Hydraulic Tank Breather Cap



DINGLI requires that this procedure be performed every 500 hours or semi-annually, whichever comes first.

The hydraulic tank is a vented-type tank. The breather cap has an internal air filter that can become clogged or, over time, can deteriorate. If the breather cap is faulty or improperly installed, impurities can enter the hydraulic system which may cause component damage. Extremely dirty conditions may require that the cap be inspected more often.

1 Remove and discard the hydraulic tank breather cap.

2 Install a new cap onto the tank.

Maintenance

C-3

Inspect and Lubricate the Casters



Extremely dirty conditions may require that the casters be inspected and lubricated more often.

1 Visually inspect each caster for cuts, cracks or unusual wear.

2 Move the machine on a flat smooth surface and check that the casters roll smoothly.

3 Pump grease into the caster until it can be seen coming out of the bearing seal gap.

Checklist D Procedures

D-1

Test or Replace the Hydraulic Oil



DINGLI requires that this procedure be performed every 1000 hours or annually, whichever comes first.

Replacement or testing of the hydraulic oil is essential for good machine performance and service life. Dirty oil may cause the machine to perform poorly and continued use may cause component damage. Extremely dirty conditions may require oil changes to be performed more often.

Note: Perform this procedure with the platform in the stowed position.

1 Disconnect the battery pack from the machine.

⚠WARNING Electrocution / burn hazard. Contact with electrically charged circuits could result in death or serious injury. Remove all rings, watches and other jewelry.

2 Open the cover.

3 Tag and disconnect the hydraulic pump outlet line and remove the line from the pump. Cap the fitting on the pump.

4 Loosen the bolt and remove the hydraulic power pack form the tray.

5 Loose and remove the bolts and separate the tank from the pump body.

6 Drain all of the oil into a suitable container.

⚠WARNING Bodily injury hazard. Spraying hydraulic oil can penetrate and burn skin. Loosen hydraulic connections very slowly to allow the oil pressure to dissipate gradually. Do not allow oil to squirt or spray.

7 Clean up any oil that may have spilled. Properly discard the used oil.

8 Clean the inside of the hydraulic tank using a mild solvent. Allow the tank to dry completely.

9 Install the hydraulic tank and install and tighten the hydraulic tank retaining fasteners. Torque to specification.

Torque specifications	
Hydraulic tank retaining fasteners, dry	4 Nm
Hydraulic tank retaining fasteners, lubricated	2.9Nm

10 Install the hydraulic power pack into the tray. Install the fitting and hydraulic hoses onto the hydraulic power pack and torque.

11 Fill the tank with hydraulic oil until the fluid is full in the hydraulic tank. Do not overfill.

12 Activate the pump to fill the hydraulic system with oil and bleed the system of air.

⚠WARNING Component damage hazard. The pump can be damaged if operated without oil. Be careful not to empty the hydraulic tank while in the process of filling the hydraulic system. Do not allow the pump to cavitate.

Maintenance

Checklist E Procedures

E-1

The maintenance steps of solving machine down faults

During the operating, uneven stress on platform may cause machine down malfunction. This is an unpredictable situation. The following should be check by a field service professional:

1 Check for cleanliness and lubrication of the masts.

⊙ Result: Good cleanliness and lubrication,

¤ Result: Discover foreign bodies, remove it. Spread the butter properly in the masts.

2 Check the adjustment of screws in roller.

⊙ Result: The screw has a moderate position.

¤ Result: The adjustment of screws is greater. Adjust the screw to a moderate position.

3 Check for the machine, especially the descending auxiliary device.

⊙ Result: All parts are intact.

¤ Result: Discover damaged parts, replace immediately.

All above content check and measures are finished, fully raise and lower unit 5 times, at least, once the problem is fixed.

Hydraulic Schematic

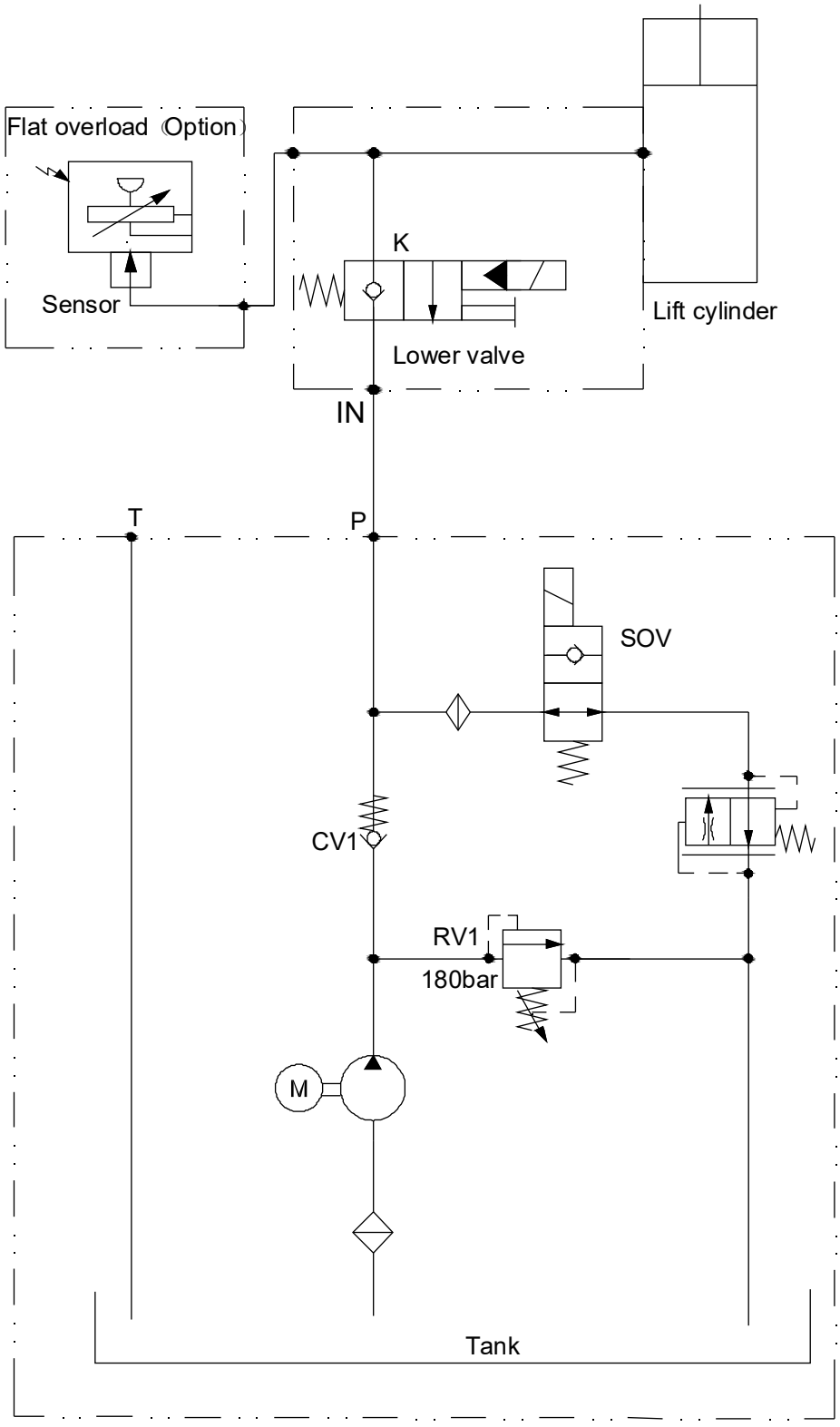

Schematic

Electrical Schematic

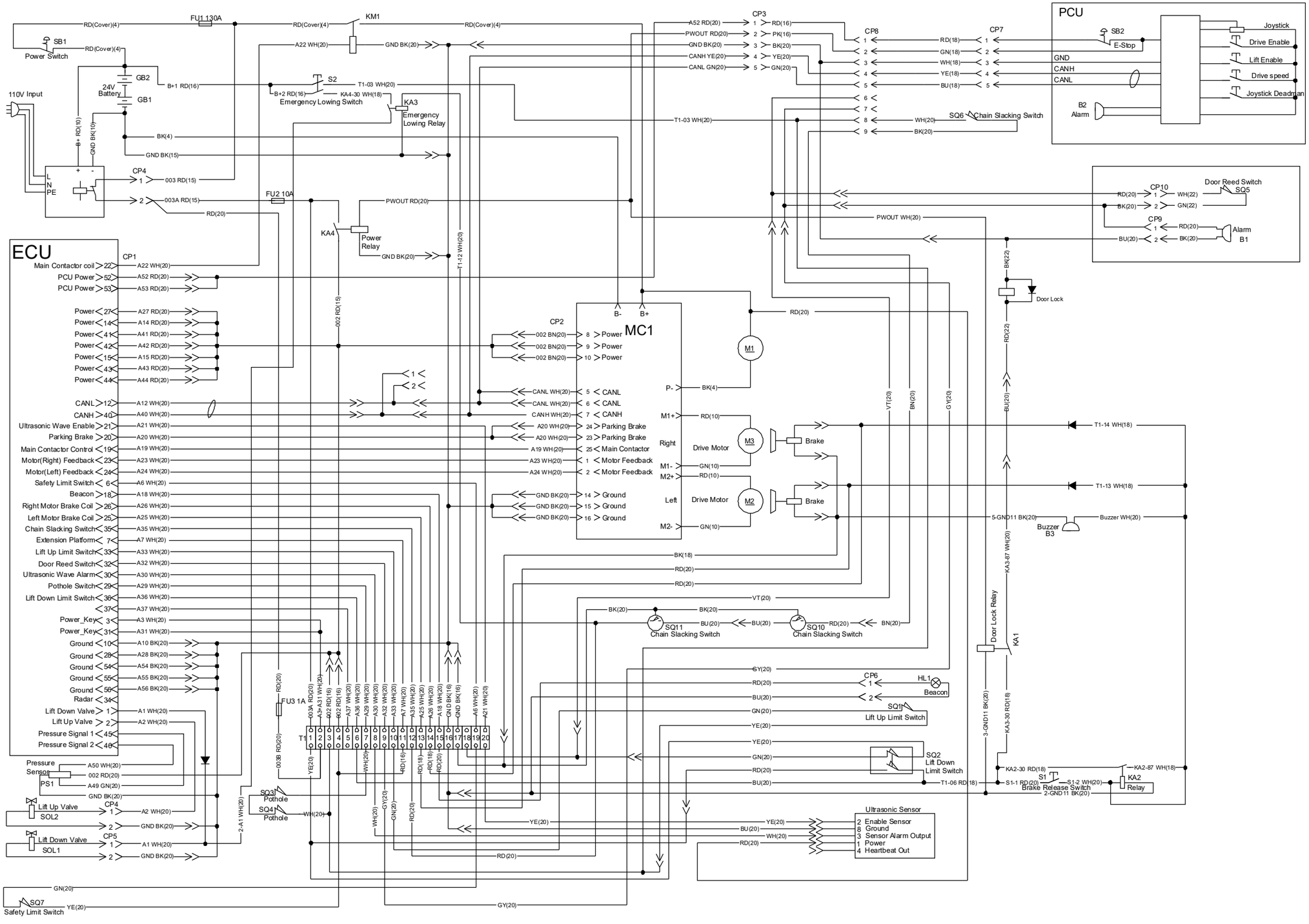

Inspection and Repair Log

Date	Comments