SELF-PROPELLED STOCK PICKER

PARTS MANUAL

(For ZDYT3-3.7S)



WARNING

THE MANUFACTURER SHALL NOT BE HELD LIABLE IN CASE OF FAULTS OR ACCIDENTS DUE TO NEGLIGENCE, INCAPACITY, INSTALLATION BY UNQUALIFIED TECHNICIANS AND IMPROPER USE OF THE MACHINE

DO NOT OPERATE THIS MACHINE UNTIL YOU READ AND UNDERSTAND ALL THE DANGERS,WARNINGS AND CAUTIONS IN THIS MANUAL

Part Number: SM0719211_Rev1.1

Zhejiang Dingli Machinery Co., Ltd. First Edition, December 2018 Printing

Version of the Record

Version Number	Create Date
SM0719211_Rev1.0	2018-12
SM0719211_Rev1.1	2019-08

Table of Contents

Section 1 Complete Machine

101.1 Complete Machine 2

Section 2 Chassis and Outer Mast

201.1 Chassis and Outer Mast Assembly (without Protect Cover)....5

201.2 Chassis and Outer Mast Assembly (with Protect Cover)....8

202.1 Battery Pack Module....13

203.1 Ground Control Assembly 16

204.1 Hydraulic Power Unit 18

205.1 Pothole Protection Assembly (Only the Model without Protect Cover) 19

206.1 Lateral Roller Assembly 22

207.1 Right Drive Wheel Assembly 23

208.1 Left Drive Wheel Assembly 24

Section 3 Lifting Mechanism

301.1 Inner Mast Assembly....27

302.1 Lifting Chain Assembly....29

303.1 Descending Auxiliary Device....30

Section 4 Platform

401.1 Entry Gate Installation....33

402.1 Platform Assembly 35

403.1 Platform Control Box Assembly 38

Section 5 Hydraulic System

501.1 Lift Cylinder Assembly....41

502.1 Hydraulic Hoses and Fittings....43

Section 6 Electrical System

601.1 Electrical Harness....45

Section 1
Complete Machine

101.1 Complete Machine

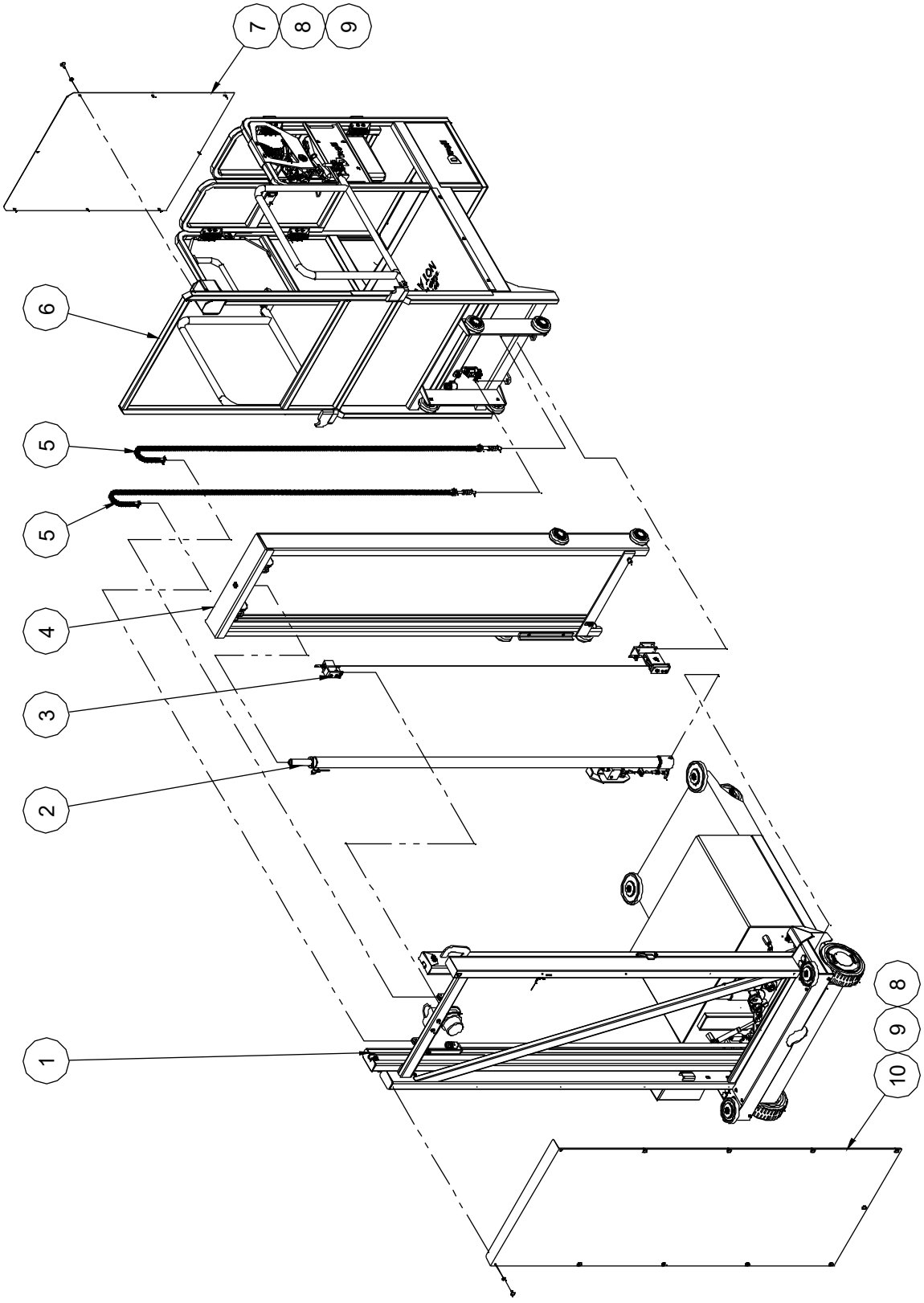

101.1 Complete Machine

Item	Part No.	Description	Qty.
1		Chassis and outer mast assembly (without protect cover) (refer to 201.1)	1
		Chassis and outer mast assembly (with protect cover) (refer to 201.2)	1
2		Lift cylinder assembly (refer to 501.1)	1
3	10007275	Descending auxiliary device (refer to 303.1)	1
4		Inner mast assembly (refer to 301.1)	1
5	10006580	Lifting chain assembly (refer to 302.1)	2
6		Platform assembly (refer to 401.1, 402.1)	1
7	10006586	Cover	1
8	10000065	Washer	19
9	10000063	Screw (L20)	19
10	10007212	Cover	1

Section 2
Chassis and Outer Mast

201.1 Chassis and Outer Mast Assembly (without Protect Cover)

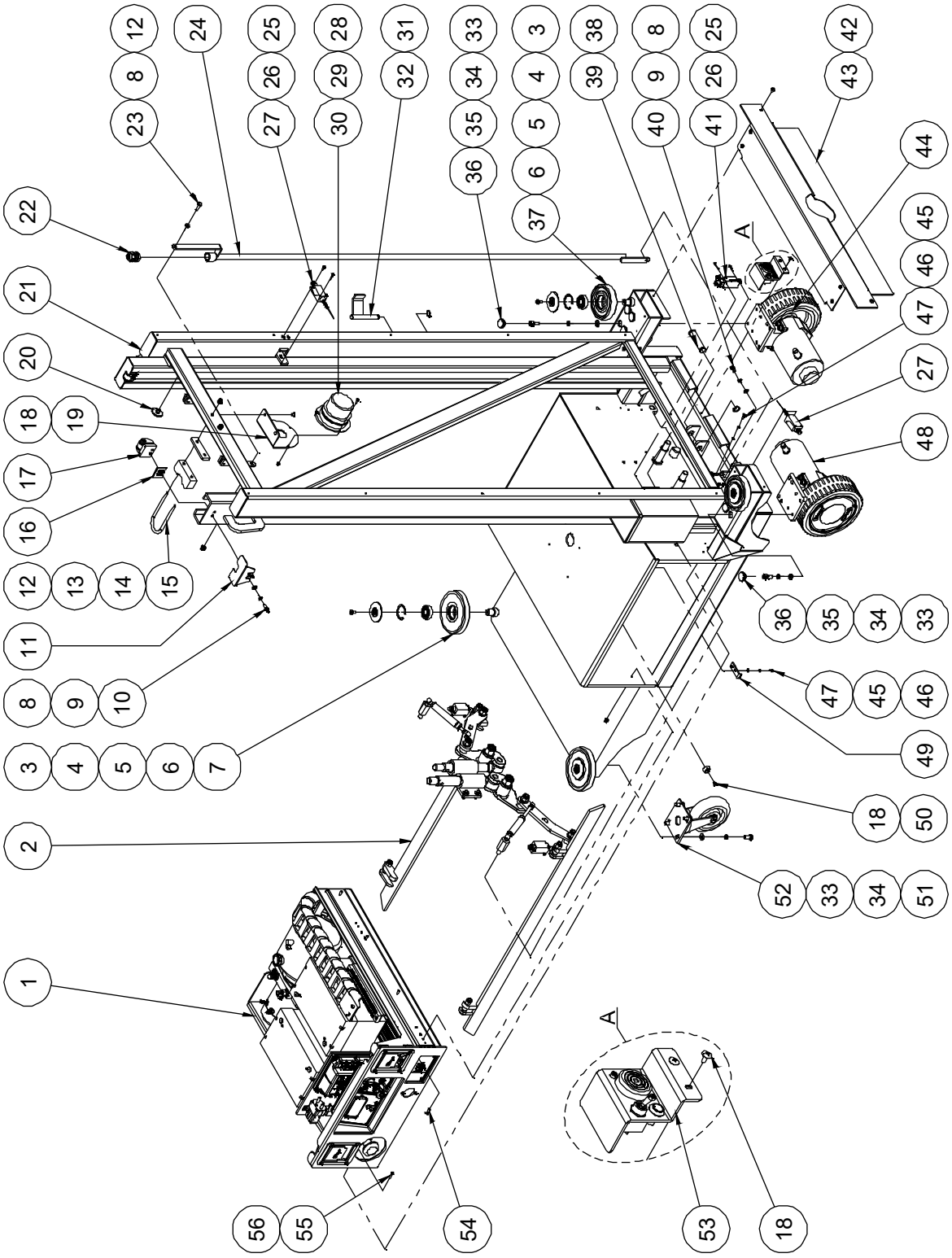

201.1 Chassis and Outer Mast Assembly (without Protect Cover)

Item	Part No.	Description	Qty.
1		Battery pack module (refer to 202.1)	1
2		Pothole protection assembly (refer to 205.1)	1
3	00005166	Screw GB/T 819 M8×16 - H	4
4	10006749	Cover	4
5	00000887	Circlips GB/T 893.1-47	4
6	00001295	Bearing GB/T 276-1994 - 6204	4
7	10000305	Roller 2	2
8	00000608	Washer GB/T 97.1 8	10
9	00000609	Washer GB/T 93 8	9
10	00001061	Screw GB/T 70.1 M8×20	4
11	10006748	Cover	2
12	00002575	Nut GB/T 6183.1 M8	3
13	10006747	Adjusting plate	1
14	10006745	Cylinder seat	1
15	10006754	Cylinder hoop	1
16	10006743	Adjusting plate (1mm, 1.5mm, 2mm)	A/R
17		Lateral roller assembly (refer to 206.1)	2
18	00000999	Screw GB/T 973 M5×10	6
19	10006750	Beacon bracket	1
20	10000264	Block	2
21	10011853	Chassis and outer mast weldment	1
22	00002316	Water-proof joint M24	1
23	00000993	Bolt GB/T 5783 M8×25	1
24	10006491	Cable tube weldment	1
25	00002228	Screw GB/T 70.1 M4×25	4
26	00001054	Screw GB/T 70.1 M4×12	4
27	00004890	Limit switch	2
28	00002573	Nut GB/T 6183.1 M5	3

201.1 Chassis and Outer Mast Assembly (without Protect Cover)

Item	Part No.	Description	Qty.
29	00002523	Screw GB/T 973 M5×16	3
30	00004884	Beacon	1
31	00000930	Circlips GB/T 894.1-16	1
32	10011614	Safety support	1
33	00000615	Washer GB/T 97.1 10	16
34	00000679	Washer GB/T 93 10	16
35	00002504	Screw GB/T 70.1 M10×25	8
36	10007214	plug	8
37	10000306	Roller	2
38	00000926	Circlips GB/T 894.1-20	1
39	00005162	892-20081 Pin	1
40	00001063	Bolt GB/T 5783 M8×16	1
41	00000748	Limit switch	1
42	00001060	Screw GB/T 818 M6×12 - H	6
43	10011729	Cover	1
44	10007034	Right drive wheel assembly (refer to 207.1)	1
45	00000605	Washer GB/T 97.1 5	8
46	00000606	Washer GB/T 93 5	8
47	00001252	Screw GB/T 70.1 M5×12	8
48	10007032	Left drive wheel assembly (refer to 208.1)	1
49	10001571	Lock	2
50	10000376	Bumper	2
51	00000678	Bolt GB/T 5783 M10×25	8
52	10006756	Caster	2
53		Brake release assembly (refer to 209.1)	1
54	00005236	Screw GB/T 819 M6×20 - H	4
55	00005282	Screw GB/T 819 M6×25 - H	4
56	00002574	Nut GB/T 6183.1 M6	4

201.2 Chassis and Outer Mast Assembly (with Protect Cover)

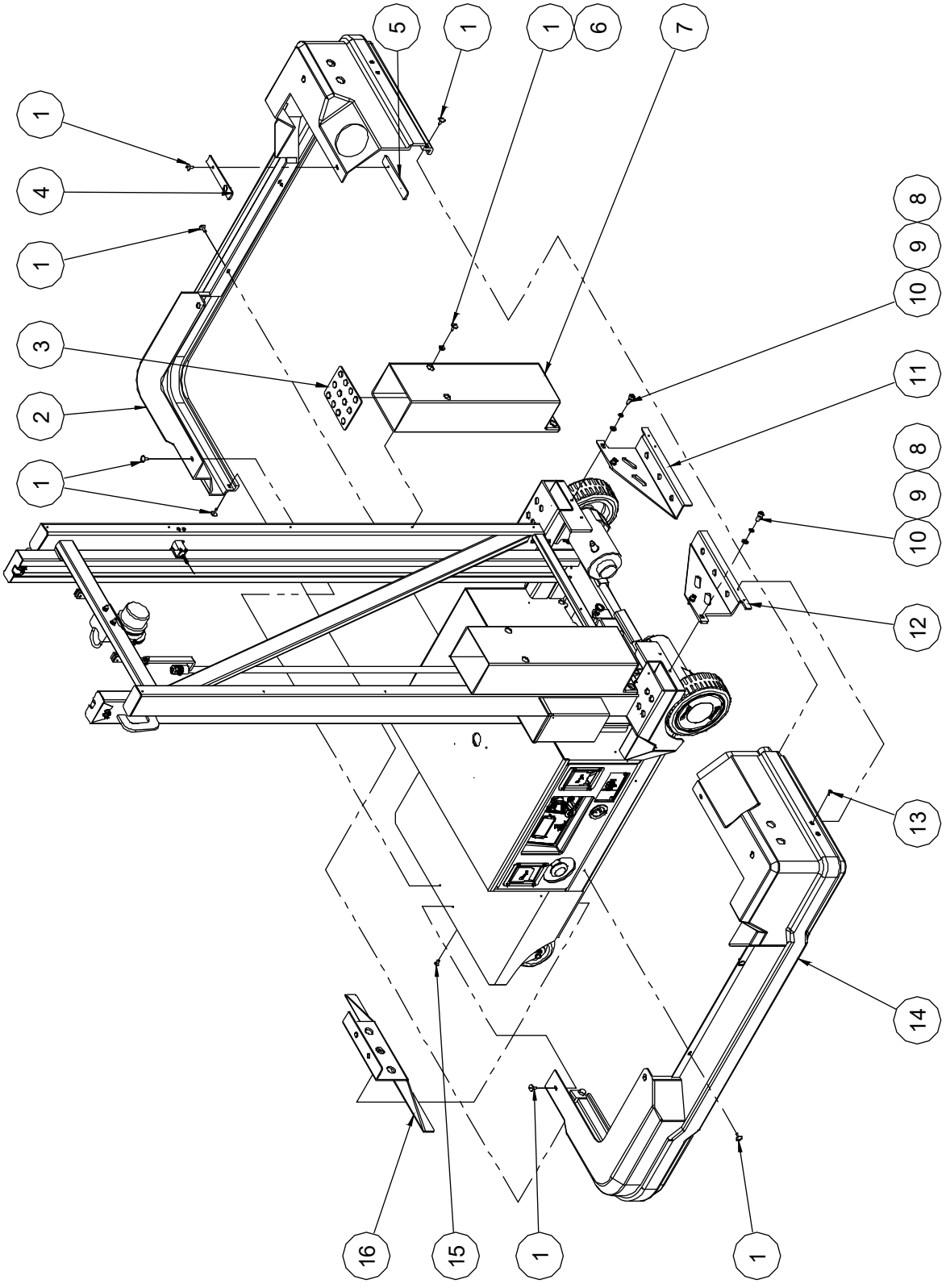

201.2 Chassis and Outer Mast Assembly (with Protect Cover)

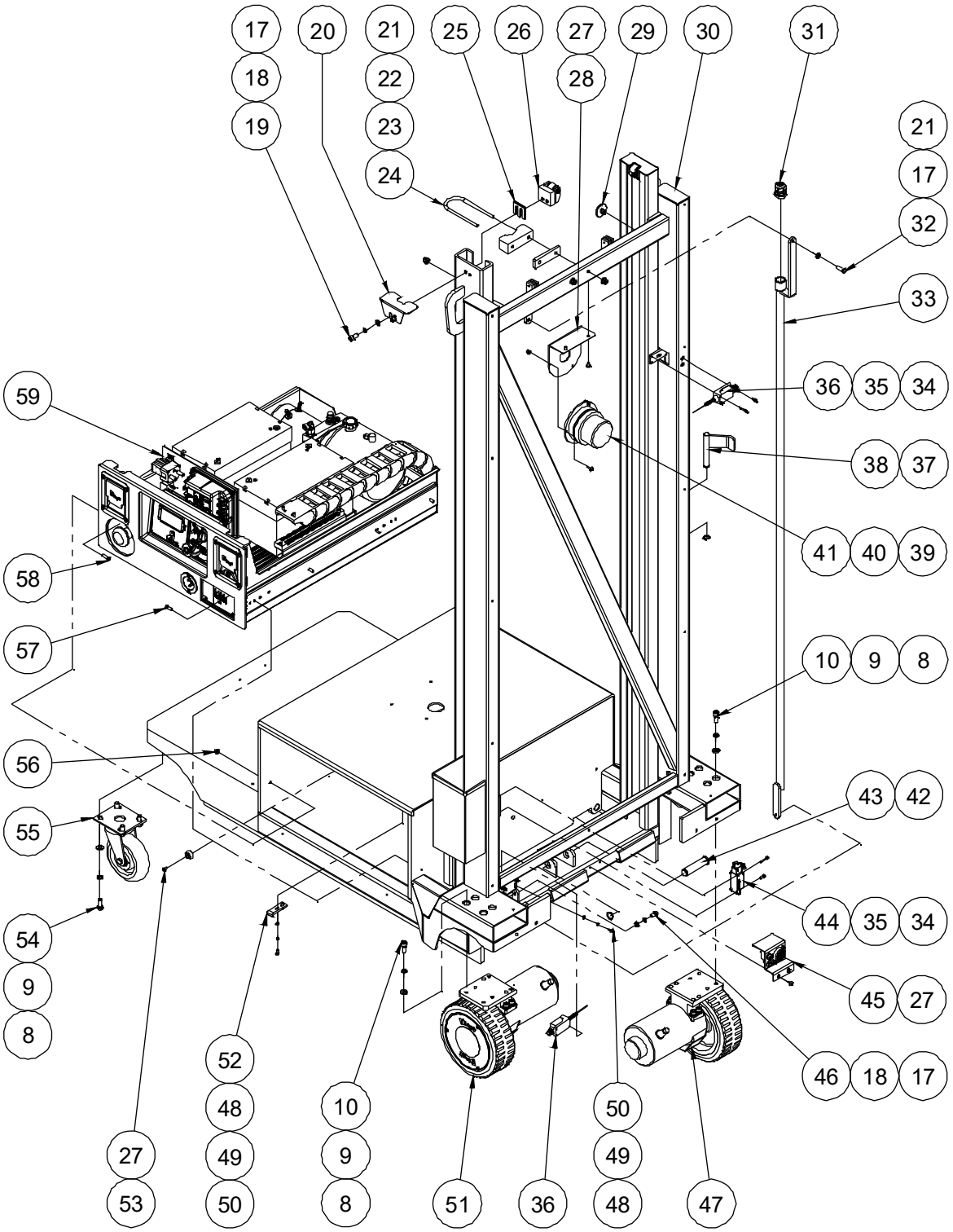

201.2 Chassis and Outer Mast Assembly (with Protect Cover)

Item	Part No.	Description	Qty.
1	10000063	Screw (L20)	20
2	10007826	Right cover	1
3	10007829	Rubber pad	2
4	10007825	Connection plate	1
5	10007824	Connection plate	1
6	10000065	Washer	4
7	10007830	Storage box	2
8	00000615	Washer GB/T 97.1 10	20
9	00000679	Washer GB/T 93 10	20
10	00002504	Screw GB/T 70.1 M10×25	12
11	10007822	Back support frame	1
12	10007821	Back support frame	1
13	00000830	Screw GB/T 70.3 M6×16	4
14	10007827	Left cover	1
15	00000837	Screw GB/T 70.3 M8×16	2
16	10007823	Front support frame	1
17	00000608	Washer GB/T 97.1 8	10
18	00000609	Washer GB/T 93 8	9
19	00001061	Screw GB/T 70.1 M8×20	4
20	10006748	Cover	2
21	00002575	Nut GB/T 6183.1 M8	3
22	10006747	Adjusting plate	1
23	10006745	Cylinder seat	1
24	10006754	Cylinder hoop	1
25	10006743	Adjusting plate (1mm, 1.5mm, 2mm)	A/R
26		Lateral roller assembly (refer to 206.1)	2
27	00000999	Screw GB/T 973 M5×10	6
28	10006750	Beacon bracket	1
29	10000264	Block	2

201.2 Chassis and Outer Mast Assembly (with Protect Cover)

Item	Part No.	Description	Qty.
30	10011612	Chassis and outer mast weldment	1
31	00002316	Water-proof joint M24	1
32	00000993	Bolt GB/T 5783 M8×25	1
33	10006491	Cable tube weldment	1
34	00002228	Screw GB/T 70.1 M4×25	4
35	00001054	Screw GB/T 70.1 M4×12	4
36	00004890	Limit switch	2
37	00000930	Circlips GB/T 894.1-16	1
38	10011614	Safety support	1
39	00002573	Nut GB/T 6183.1 M5	3
40	00002523	Screw GB/T 973 M5×16	3
41	00004884	Beacon	1
42	00000926	Circlips GB/T 894.1-20	1
43	00005162	892-20081 Pin	1
44	00000748	Limit switch	1
45		Brake release assembly (refer to 209.1)	1
46	00001063	Bolt GB/T 5783 M8×16	1
47	10007034	Right drive wheel assembly (refer to 207.1)	1
48	00000605	Washer GB/T 97.1 5	8
49	00000606	Washer GB/T 93 5	8
50	00001252	Screw GB/T 70.1 M5×12	8
51	10007032	Left drive wheel assembly (refer to 208.1)	1
52	10001571	Lock	2
53	10000376	Bumper	2
54	00000678	Bolt GB/T 5783 M10×25	8
55	10006756	Caster	2
56	00002574	Nut GB/T 6183.1 M6	4
57	00005236	Screw GB/T 819 M6×20 - H	4
58	00005282	Screw GB/T 819 M6×25 - H	4

201.2 Chassis and Outer Mast Assembly (with Protect Cover)

Item	Part No.	Description	Qty.
59		Battery pack module (refer to 202.1)	1

202.1 Battery Pack Module

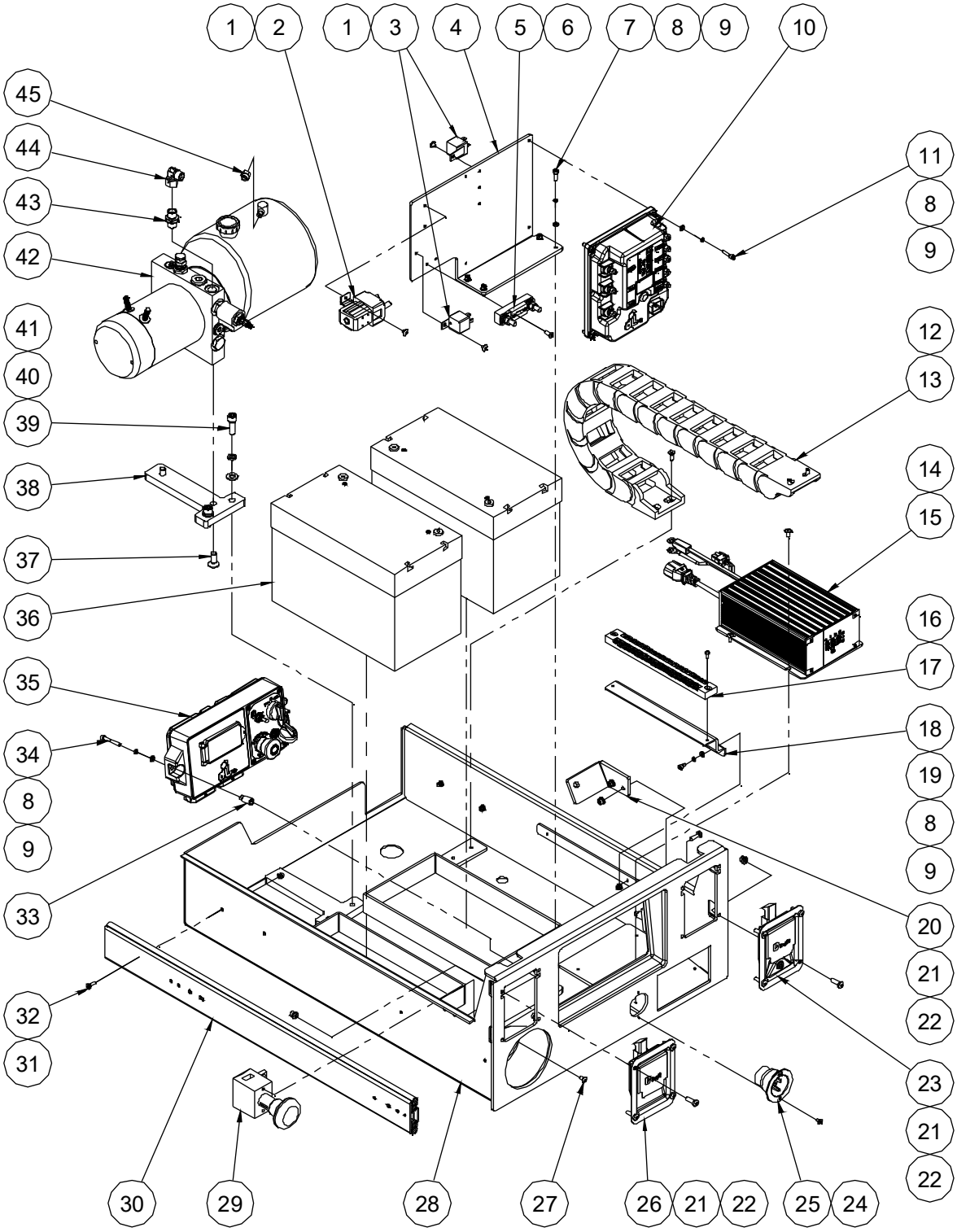

202.1 Battery Pack Module

Item	Part No.	Description	Qty.
1	00001009	Screw GB/T 973 M5×6	4
2	00002028	DC Contactor	1
3	00002561	Relay	2
4	10007088	Mounting plate	1
5	00004887	130A Fuse assembly	1
--	00004888	130A Fuse	1
--	00000757	Fuse seat	1
6	00005283	Screw GB/T 823 M5×12	2
7	00001246	Screw GB/T 70.1 M5×16	4
8	00000606	Washer GB/T 93 5	12
9	00000605	Washer GB/T 97.1 5	12
10	00002381	Motor controller	1
11	00000817	Screw GB/T 70.1 M5×20	4
12	00000830	Screw GB/T 70.3 M6×16	4
13	10013647	Towline	1
14	00001011	Screw GB/T 973 M5×12	4
15	00005059	Charger	1
16	00002026	Screw GB/T 818 M4×10 - H	2
17	00005169	Terminal strip	1
18	10006466	Terminal strip bracket	1
19	00005240	Screw GB/T 70.1 M5×8	2
20	10006472	Latch, with key	1
21	00001986	Screw GB/T 818 M6×16 - H	8
22	00002574	Nut GB/T 6183.1 M6	8
23	00001001	Screw GB/T 973 M4×8	2
24	00002614	Plug	1
25	10001482	Latch	1
26	00000999	Screw GB/T 973 M5×10	2
27	10007073	Battery tray weldment	1

202.1 Battery Pack Module

Item	Part No.	Description	Qty.
28	00000655	Power switch	1
29	10007090	Glide track	2
30	00002573	Nut GB/T 6183.1 M5	8
31	00003380	Screw GB/T 819 M5×16 - H	8
32	10001552	Sleeve pipe	2
33	00002392	Screw GB/T 70.1 M5×40	2
34	00002362B	Ground control assembly (refer to 203.1)	1
35	00004906	Battery	2
36	00000846	Screw GB/T 70.3 M10×25	2
37	10006469	Bracket	1
38	00001059	Screw GB/T 70.1 M10×30	2
39	00000679	Washer GB/T 93 10	2
40	00000615	Washer GB/T 97.1 10	2
41		Hydraulic power unit (refer to 204.1)	1
42	00001499	Straight fitting	1
43	00001833	Elbow	1
44	10000462	Nut	1

203.1 Ground Control Assembly

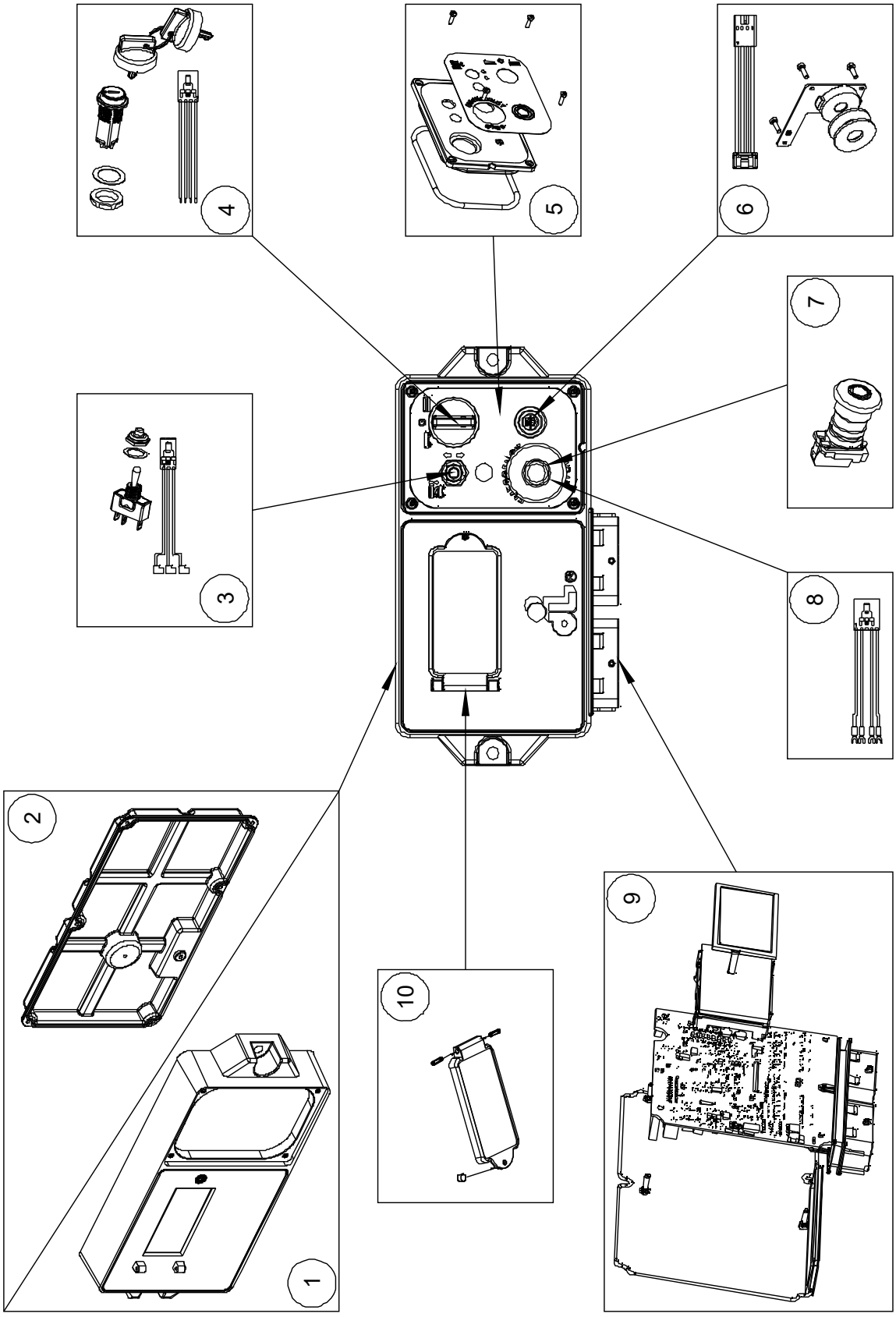

203.1 Ground Control Assembly

Item	Part No.	Description	Qty.
1	00003159	Plastic body	1
2	00003160	Plastic bottom	1
3	00004235	Toggle switch kit	1
4	00004236	Key switch kit	1
--	00003172	Key	1
5	00004238	Electromechanical panel kit	1
6	00004239	Alarm kit	1
7	00003718	Emergency stop switch	1
-	00003719	Red mushroom head	1
-	00003720	Base with 1 NC contact	1
8	00004240	Emergency stop switch harness	1
9	00004234	PCB & Display kit	1
10	00002379	Screen protector kit	1

204.1 Hydraulic Power Unit

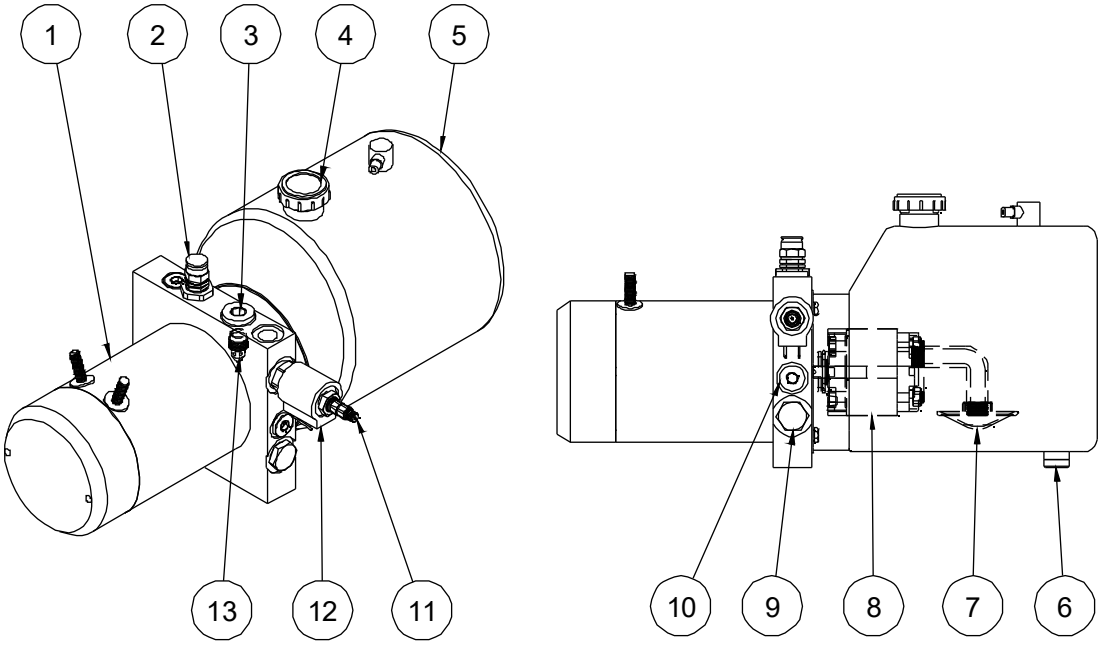

204.1 Hydraulic Power Unit

Item	Part No.	Description	Qty.
1	00003077	Motor	1
2	00005137	Relief valve	1
3	00003133	Plug	1
4	00003081	Tank cover	1
5	00003076	Tank	1
6	00003137	Plug M12×1.25	1
7	00003079	Filter web	1
8	00003073	Pump	1
9	00003282	Check valve	1
10	00003134	Plug	2
11	00003118	Solenoid valve spool	1
12	00003119	Coil	1
13	00003128	Pressure compensation valve	1

205.1 Pothole Protection Assembly (Only the Model without Protect Cover)

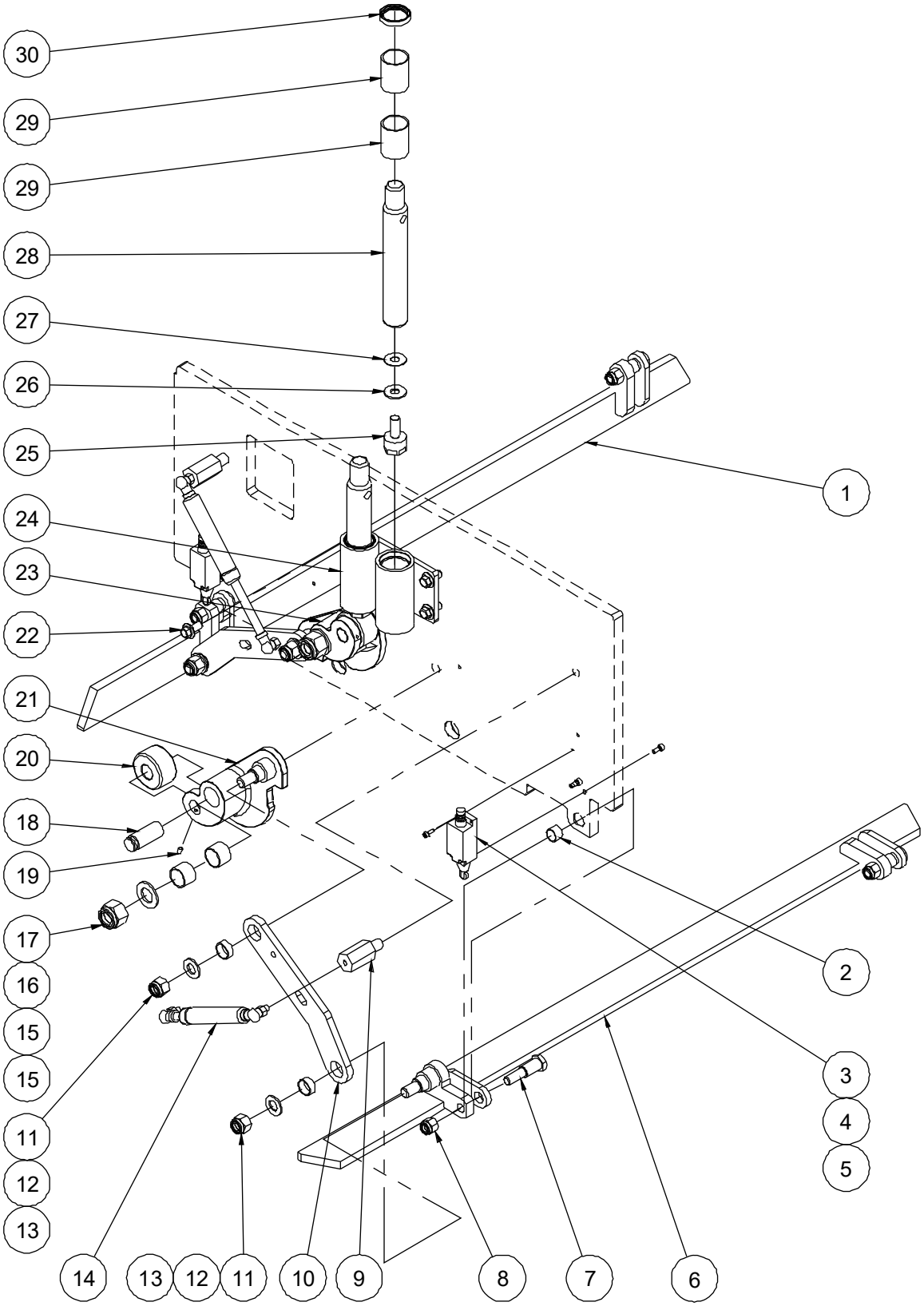

205.1 Pothole Protection Assembly (Only the Model without Protect Cover)

Item	Part No.	Description	Qty.
1	10007092	Pothole guard weldment	1
2	00000351	8812-161812 Bearing	4
3	00002419	Limit switch	2
4	00001054	Screw GB/T 70.1 M4×12	2
5	00001252	Screw GB/T 70.1 M5×12	4
6	10007098	Pothole guard weldment	1
7	10001062	Pin	4
8	00001249	Nut GB/T 6182 M12	4
9	10007106	Gas shock strut	2
10	10007102	Pothole link plate	2
11	00001044	Nut GB/T 6182 M14	4
12	00001043	Washer GB/T 97.1 14	4
13	00000356	8812-202309 Bearing	4
14	10007103	Gas shock	2
15	00000368	8812-252820 Bearing	4
16	00001050	Washer GB/T 97.1 20	2
17	00001051	Nut GB/T 6182 M20	2
18	10000572	Pin	2
19	00001039	Screw GB/T 78 M5×10	2
20	10000571	Roller	2
21	10007100	Linkage weldment	1
22	00002873	Bolt QC/T 340 M10×20	4
23	10007101	Linkage weldment	1
24	10000673	Pothole guide	1
25	10007108	Pothole hole pusher pin	2
26	10007110	Adjusting washer 1	2
27	10007111	Adjusting washer 2	2

205.1 Pothole Protection Assembly (Only the Model without Protect Cover)

Item	Part No.	Description	Qty.
28	10007109	Pothole hole pusher rod	2
29	00000390	8812-323645 Bearing	4
30	00007483	Seal GB/T 13871.1 FB 32 40 7 III	2

206.1 Lateral Roller Assembly

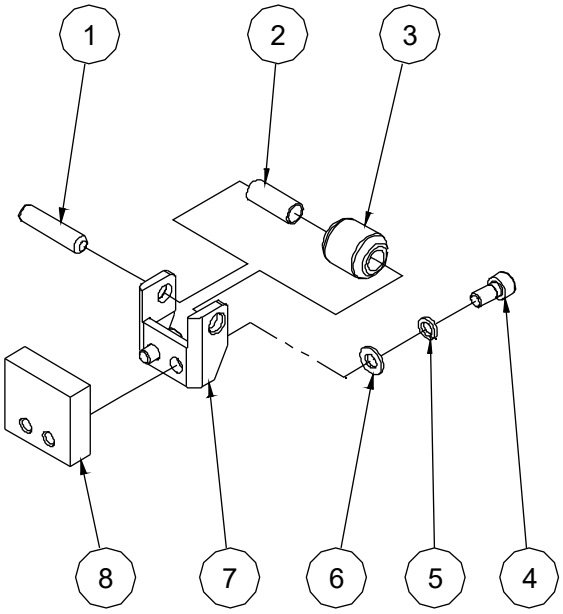

206.1 Lateral Roller Assembly

Item	Part No.	Description	Qty.
1	10011863	Pin	1
2	00000342	8812-101230 Bearing	1
3	10006494	Lateral roller	1
4	00002051	Screw GB/T 70.1 M8×16	2
5	00000609	Washer GB/T 93 8	2
6	00000608	Washer GB/T 97.1 8	2
7	10006493	Lateral roller bracket	1
8	10006742	Block	1

207.1 Right Drive Wheel Assembly

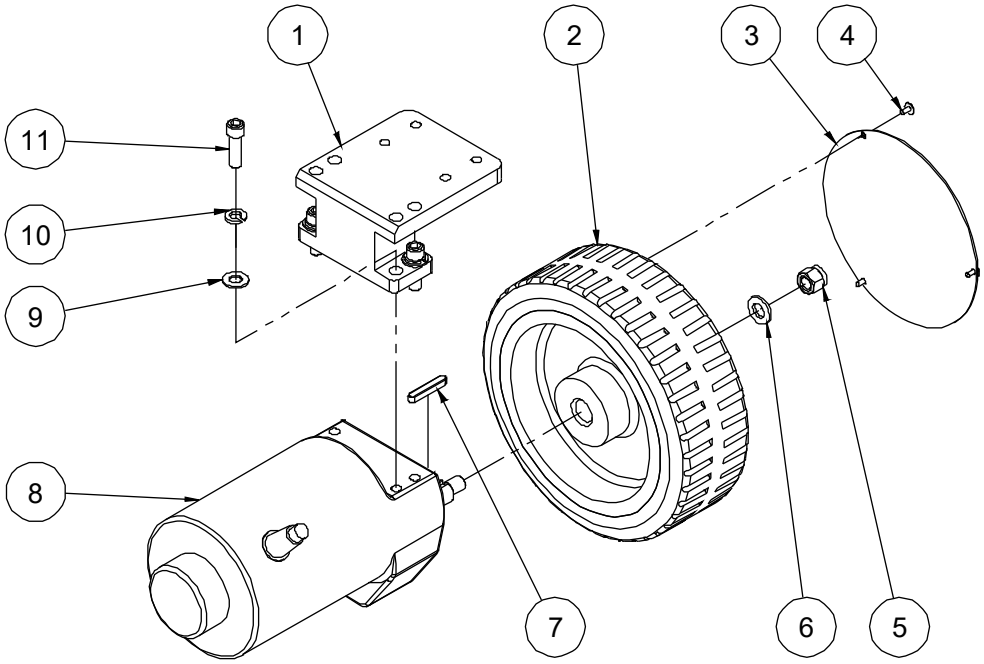

207.1 Right Drive Wheel Assembly

Item	Part No.	Description	Qty.
1	10007033	Support	1
2	10001535	Wheel	1
3	10001553	Cover	1
4	00001001	Screw GB/T 973 M4×8	3
5	00001249	Nut GB/T 6182 M12	1
6	00000814	Washer GB/T 97.1 12	1
7	00000998	Key GB/T 1096 6×6×40	1
8	00003094	Right drive motor assembly	1
--	00002407	Right motor	1
--	00003090	Reducer	1
--	00003092	Brake	1
--	00003093	Output shaft	1
9	00005182	Washer ANSI B18.22.1 narrow 3/8	4
10	00005181	Washer ANSI B18.21.1 3/8	4
11	00001157	3/8-24×1 1/4" Screw ANSI B18.3	4

208.1 Left Drive Wheel Assembly

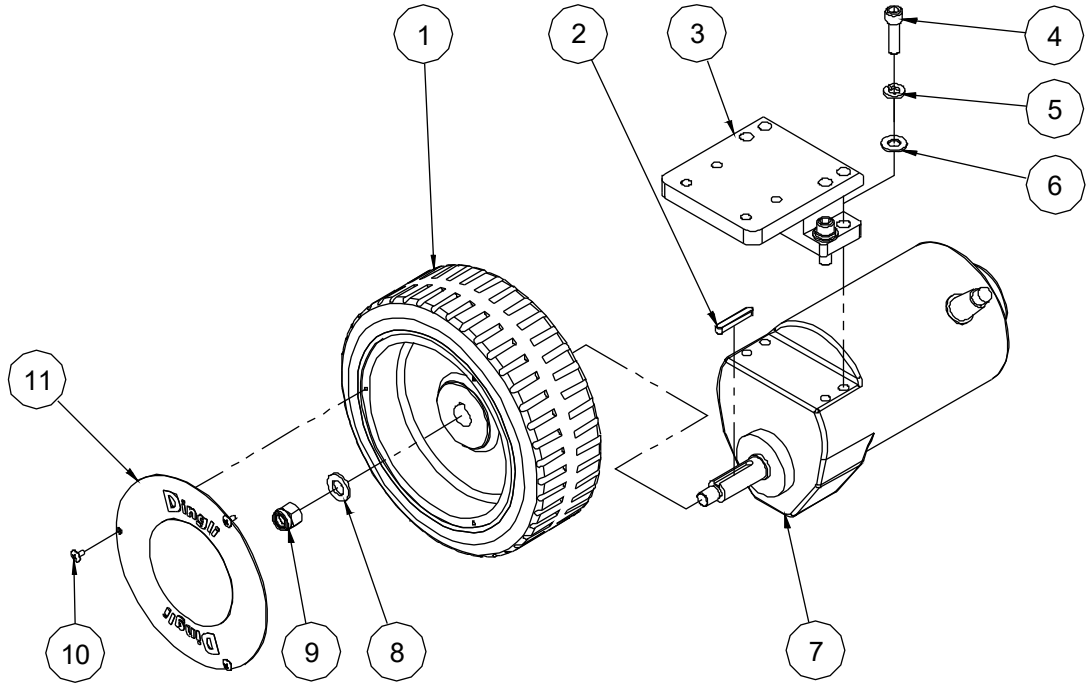

208.1 Left Drive Wheel Assembly

Item	Part No.	Description	Qty.
1	10001535	Wheel	1
2	00000998	Key GB/T 1096 6×6×40	1
3	10007033	Support	1
4	00001157	3/8-24×1 1/4" Screw ANSI B18.3	4
5	00005181	Washer ANSI B18.21.1 3/8	4
6	00005182	Washer ANSI B18.22.1 narrow 3/8	4
7	00003095	Left drive motor assembly	1
--	00002408	Left motor	1
--	00003090	Reducer	1
--	00003092	Brake	1
--	00003093	Output shaft	1
8	00000814	Washer GB/T 97.1 12	1
9	00001249	Nut GB/T 6182 M12	1
10	00001001	Screw GB/T 973 M4×8	3
11	10001553	Cover	1

209.1 Brake Release Assembly

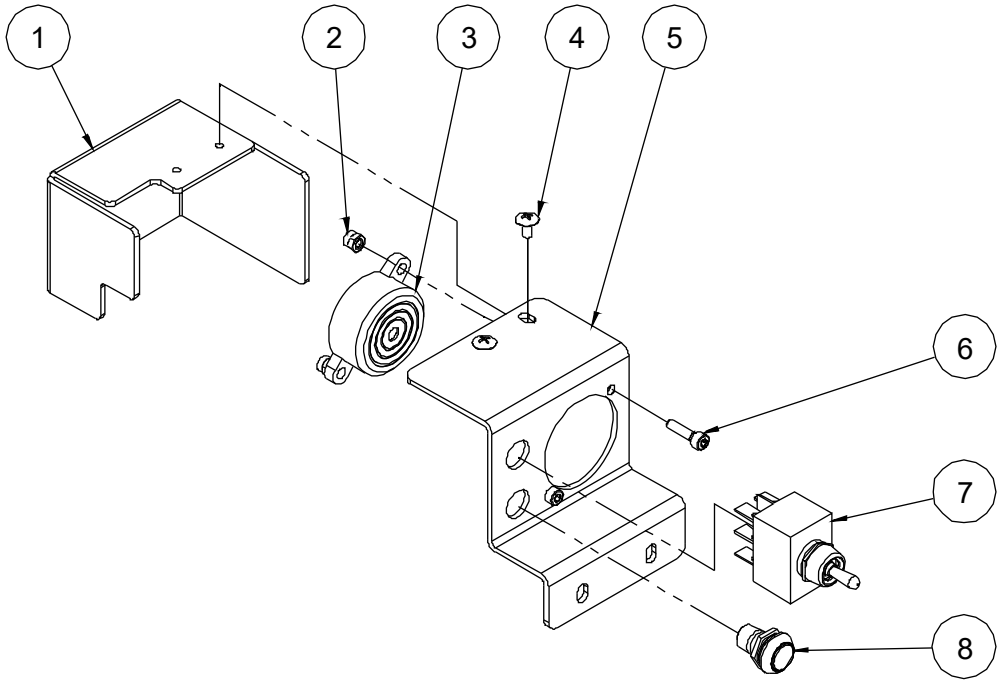

209.1 Brake Release Assembly

Item	Part No.	Description	Qty.
1	10014371	Cover	1
2	00001236	Nut GB/T 889.1 M4	2
3	00006999	Alarm	1
4	00001001	Screw GB/T 973 M4×8	2
5	10013624	Bracket	1
6	00000604	Screw GB/T 70.1 M4×16	2
7	00007032	Toggle switch	1
8	00006137	Pushbutton switch	1

Section 3
Lifting Mechanism

301.1 Inner Mast Assembly

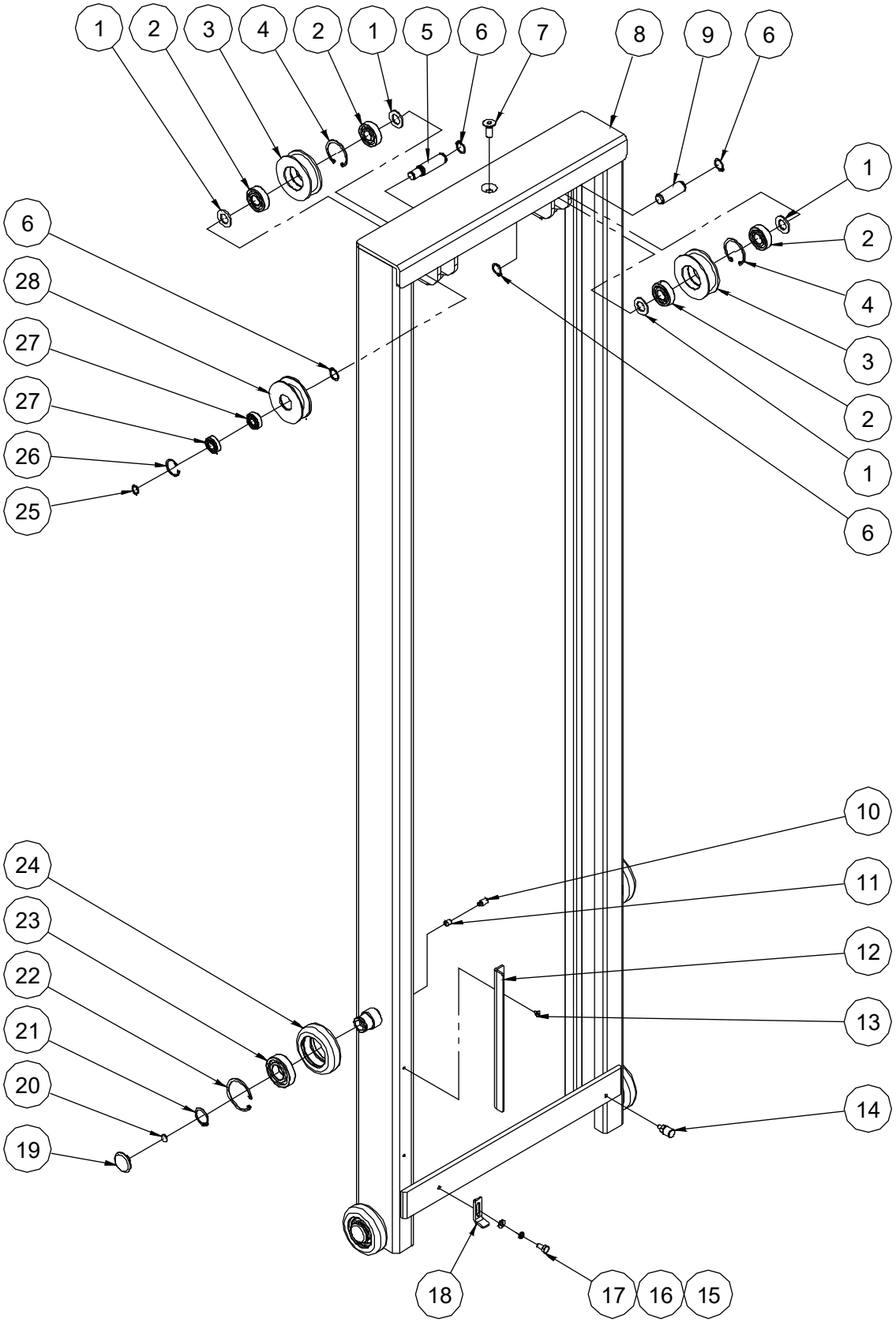

301.1 Inner Mast Assembly

Item	Part No.	Description	Qty.
1	10006479	Washer	4
2	00001295	Bearing GB/T 276-1994 - 6204	4
3	10006477	Pulley	2
4	00000890	Circlips GB/T 893.1-50	2
5	10006478	Pin	1
6	00000926	Circlips GB/T 894.1-20	4
7	00000855	Screw GB/T 70.3 M12×30	1
8	10007217	Inner mast weldment	1
9	00005133	899-20055 Pin	1
10	00005165	Screw GB/T 79 M10×20	4
11	00005164	Screw GB/T 80 M10×12	4
12	10007216	Signal plate	1
13	00000819	Screw GB/T 70.3 M5×8	2
14	10006475	Signal pole	1
15	00000608	Washer GB/T 97.1 8	1
16	00000609	Washer GB/T 93 8	1
17	00001063	Bolt GB/T 5783 M8×16	1
18	10006474	Signal plate	1
19	10006578	Block	4
20	10006579	Washer	4
21	00000924	Circlips GB/T 894.1-30	4
22	00000896	Circlips GB/T 893.1-62	4
23	00005145	Bearing GB/T 276-1994 - 6206	4
24	10006577	Roller	4
25	00002893	Circlips GB/T 894.1-15	1
26	00000919	Circlips GB/T 893.1-32	1
27	00005144	Bearing GB/T 276-1994 - 6002	2
28	10006473	Pulley	1

302.1 Lifting Chain Assembly

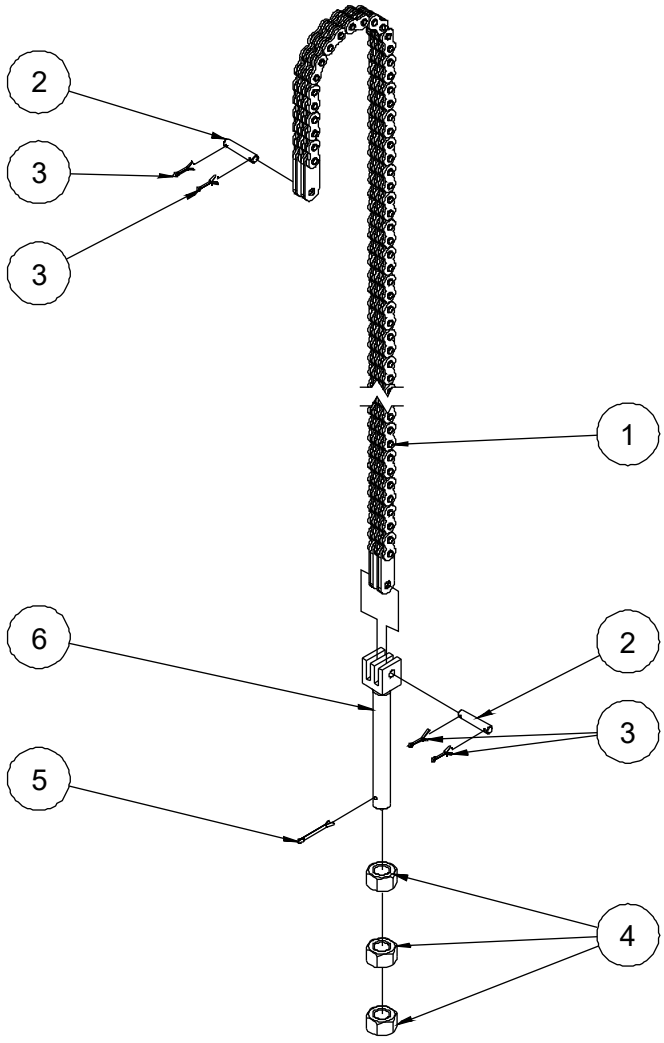

302.1 Lifting Chain Assembly

Item	Part No.	Description	Qty.
1	10007534	Chain	1
2	10006582	Pin	2
3	00005239	Cotter pin GB/T 91 2×16	4
4	00004994	Nut GB/T 6170 M14	3
5	00005271	Cotter pin GB/T 91 2.5×30	1
6	10006581	Chain terminal	1

303.1 Descending Auxiliary Device

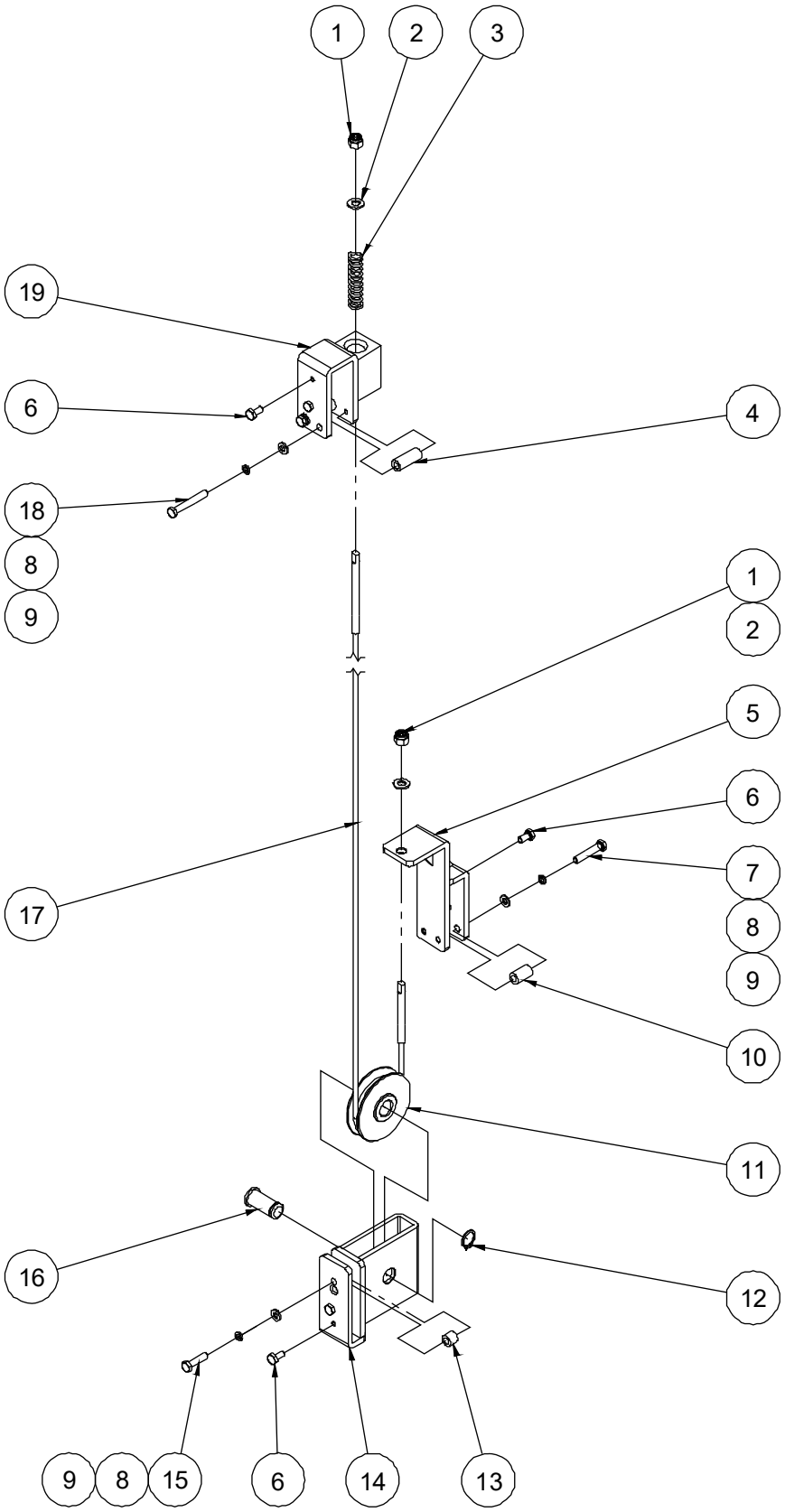

303.1 Descending Auxiliary Device

Item	Part No.	Description	Qty.
1	00001163	Nut GB/T 6182 M8	2
2	00000608	Washer GB/T 97.1 8	2
3	10006631	Spring	1
4	10006633	Spacer	2
5	10007276	Lower support weldment	1
6	00000745	Bolt GB/T 5783 M6×12	6
7	00005158	Bolt GB/T 5782 M6×35	2
8	00000621	Washer GB/T 93 6	5
9	00000620	Washer GB/T 97.1 6	5
10	10006731	Spacer	2
11	10006629	Pulley	1
12	00000930	Circlips GB/T 894.1-16	1
13	10006632	Spacer	1
14	10006625	Pulley bracket	1
15	00000619	Bolt GB/T 5783 M6×25	1
16	00005117	892-16030 Pin	1
17	10006630	Wire rope	1
18	00002312	Bolt GB/T 5782 M6×45	2
19	10006622	Upper support weldment	1

Section 4
Platform

401.1 Entry Gate Installation

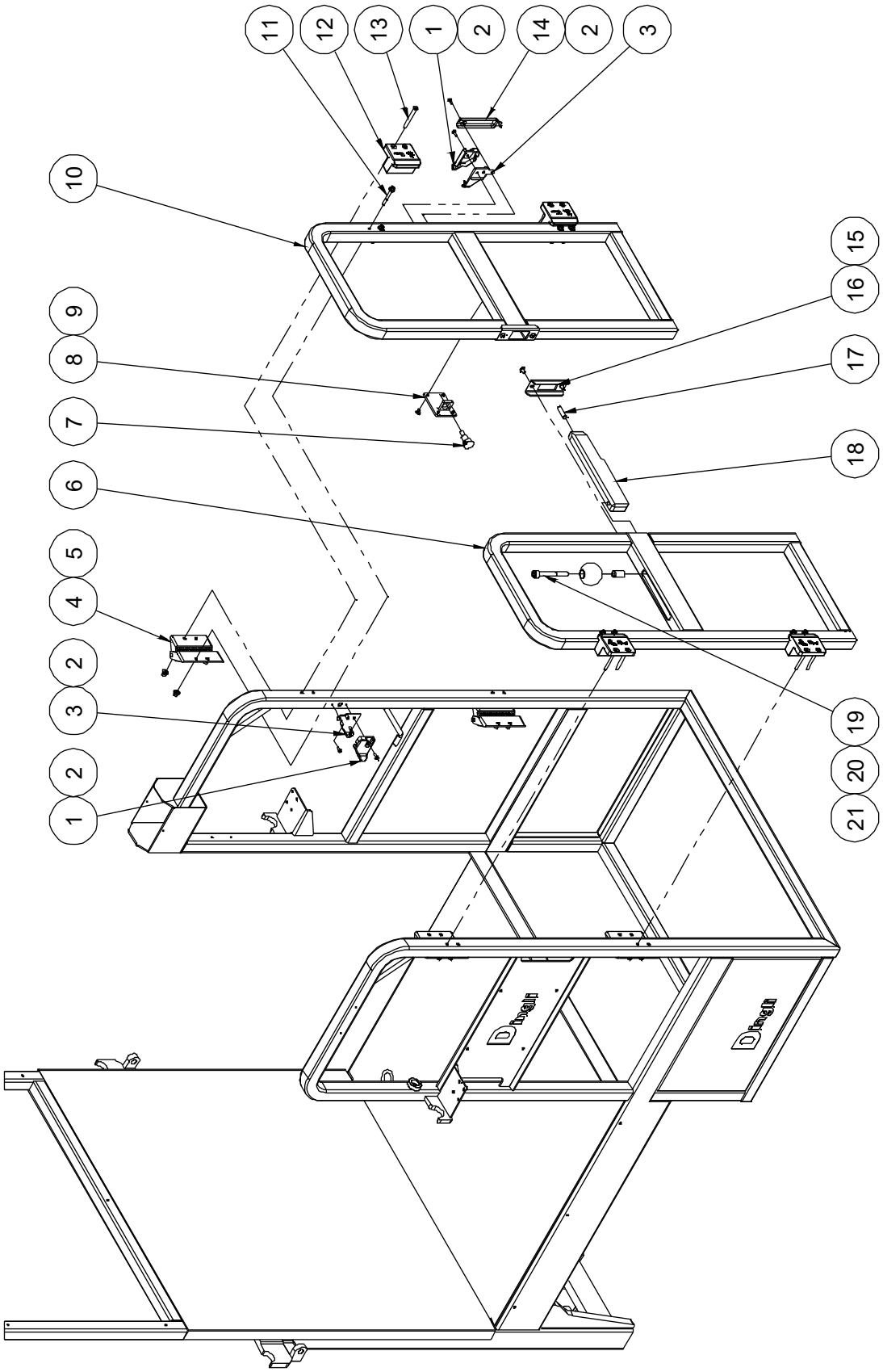

401.1 Entry Gate Installation

Item	Part No.	Description	Qty.
1	10006607	Guard box cover	2
2	00002026	Screw GB/T 818 M4×10 - H	5
3	10006606	Guard box bottom plate	2
4	50004875	Hinge	4
5	00002574	Nut GB/T 6183.1 M6	16
6	10007256	Entry gate	1
7	00004907	Door magnetic switch	1
8	10007259	Switch bracket	1
9	00000819	Screw GB/T 70.3 M5×8	4
10	10007251	Entry gate	1
11	00002585	Bolt GB/T 16674 M6×45	8
12	10006584	Block, gate stop	4
13	00004581	Screw GB/T 70.3 M6×60	8
14	10006589	Protection plate	1
15	00000999	Screw GB/T 973 M5×10	4
16	10007285	Cover	2
17	10007288	Magnet	1
18	10007284	Latch	1
19	00005183	Screw GB/T 70.1 M10×80	1
20	10007287	knob	1
21	10007286	Sleeve pipe	1

402.1 Platform Assembly

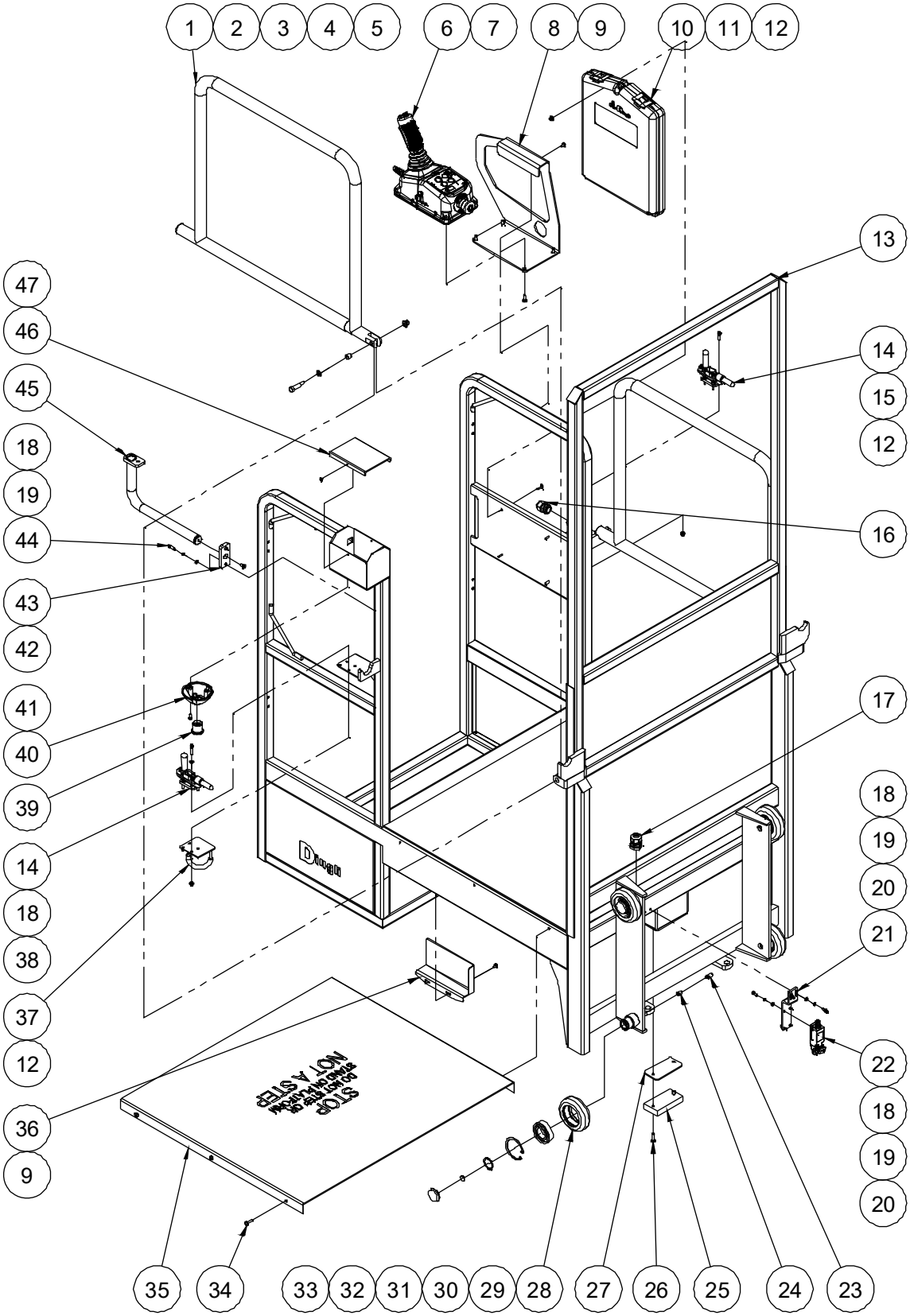

402.1 Platform Assembly

Item	Part No.	Description	Qty.
1	10007263	Guard bar	2
2	10006603	Pin	2
3	00000608	Washer GB/T 97.1 8	2
4	00000340	8812-101210 Bearing	2
5	00002575	Nut GB/T 6183.1 M8	2
6	00003180	Platform control box assembly (refer to 403.1)	1
7	00001986	Screw GB/T 818 M6×16 - H	4
8	10007273	Platform control box mount bracket	1
9	00000999	Screw GB/T 973 M5×10	4
10	50000555	Manual box	1
11	00002523	Screw GB/T 973 M5×16	4
12	00002573	Nut GB/T 6183.1 M5	12
13	10011855	Platform weldment (The model without protect cover)	1
	10011618	Platform weldment (The model with protect cover)	1
14	10006638	Lock pin	2
15	00000817	Screw GB/T 70.1 M5×20	4
16	00001828	Water-proof joint M20	1
17	00002316	Water-proof joint M24	1
18	00000605	Washer GB/T 97.1 5	17
19	00000606	Washer GB/T 93 5	9
20	00001252	Screw GB/T 70.1 M5×12	6
21	10006590	Switch bracket	1
22	00000748	Limit switch	1
23	00005165	Screw GB/T 79 M10×20	4
24	00005164	Screw GB/T 80 M10×12	4
25	10001400	Pothole pusher (Only the model without protect cover)	1
26	00000832	Screw GB/T 70.3 M6×25 (Only the model without protect cover)	2
27	10007289	Shim plate (Only the model without protect cover)	1

402.1 Platform Assembly

Item	Part No.	Description	Qty.
28	10006577	Roller	4
29	00005145	Bearing GB/T 276-1994 - 6206	4
30	00000896	Circlips GB/T 893.1-62	4
31	00000924	Circlips GB/T 894.1-30	4
32	10006579	Washer	4
33	10006578	Block	4
34	00001166	Screw GB/T 818 M6×20 - H	6
35	10007282	Deck plate	1
36	10007283	Cover	1
37	10006616	Safety belt hook	1
38	00002484	Screw GB/T 70.1 M5×25	4
39	00004885	Alarm	1
40	10006588	Alarm protect cover	1
41	00000607	Screw GB/T 818 M5×12 - H	3
42	00000829	Screw GB/T 70.3 M6×12	1
43	10007272	Spacer plate	1
44	00001246	Screw GB/T 70.1 M5×16	3
45	10007268	Grab handle weldment	1
46	10007274	Cover	1
47	00001001	Screw GB/T 973 M4×8	2

403.1 Platform Control Box Assembly

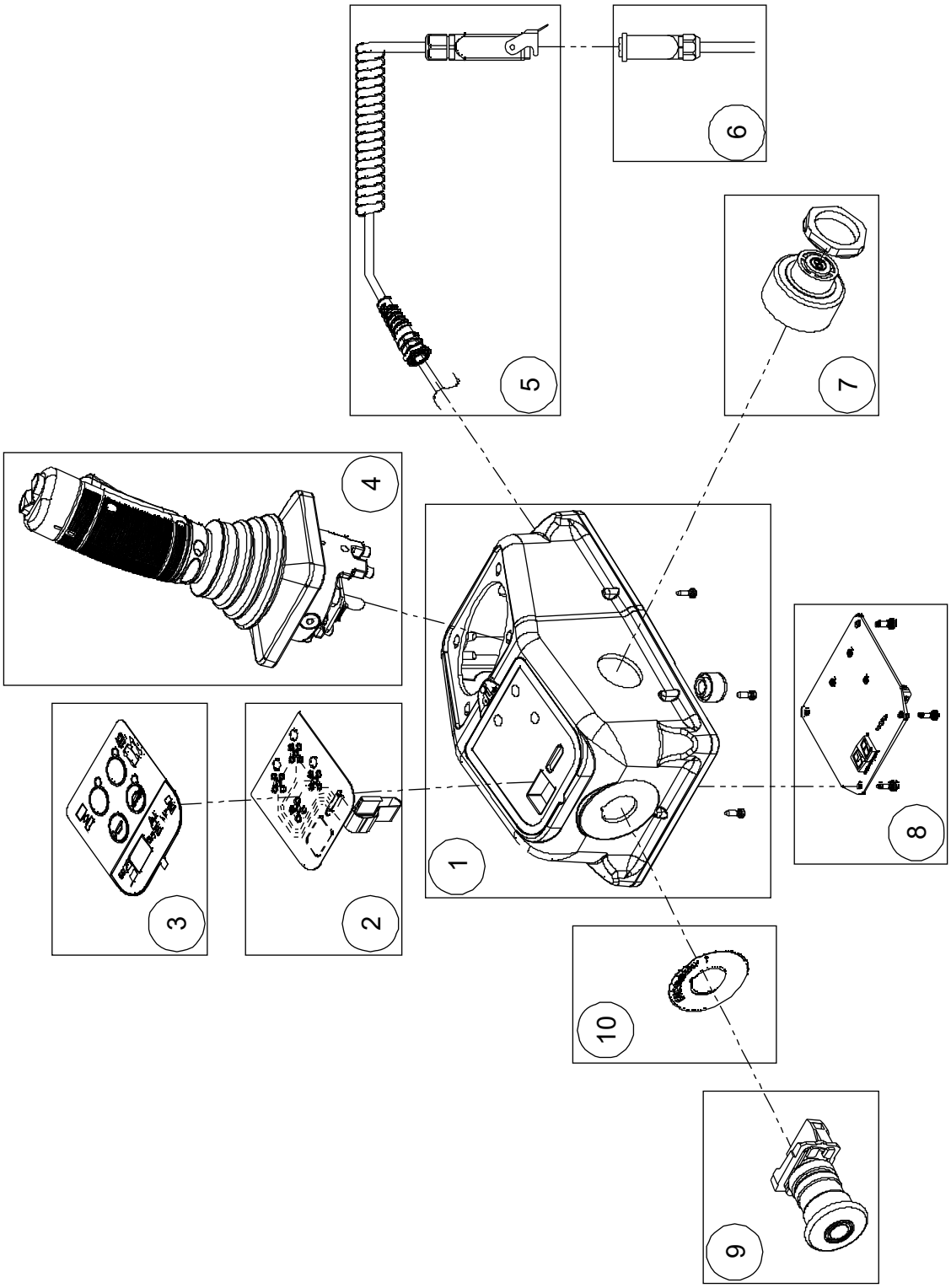

403.1 Platform Control Box Assembly

Item	Part No.	Description	Qty.
1	00004224	PCU housing	1
2	00004225	Keyboard	1
3	09140006	Decal, Platform control panel	1
4	00003182	Joystick	1
--	00006579	Joystick PCB	1
5	00002325	Coil cord	1
--	00003037	Housing	1
--	00003039	Male insert	1
--	00003041	Male contacts	5
--	00003043	Cable gland	1
6	00005317	Platform control box harness	1
--	00003042	Hood	1
--	00003040	Female insert	1
--	00003038	Female contacts	5
--	00003043	Cable gland	1
7	00003183	Alarm	1
8	00006581	Main board	1
9	00003718	Emergency stop switch	1
--	00003719	Red mushroom head	1
--	00003720	Base with 1 NC contact	1
10	00002328	Decal, Emergency stop switch	1

Section 5
Hydraulic System

501.1 Lift Cylinder Assembly

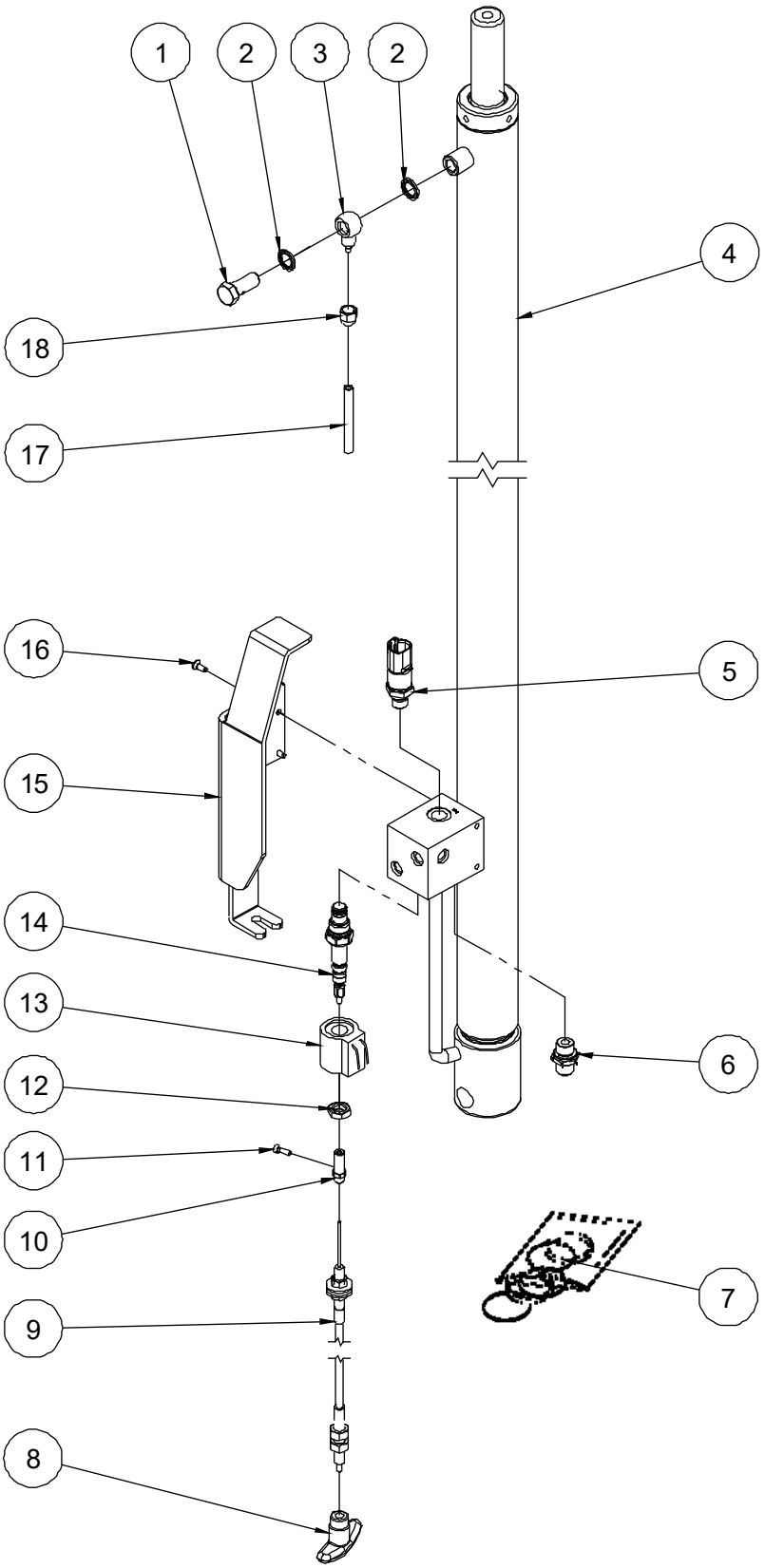

501.1 Lift Cylinder Assembly

Item	Part No.	Description	Qty.
1	10000464	Fitting	1
2	00002519	Washer BS/A 13.74	2
3	10000465	Fitting	1
4	10013566	Lift cylinder	1
5	00007393	Pressure sensor	1
6	00001291	Straight fitting	1
7	00005156	Seal kit	1
8	10000410	Lowering knob	1
9	10013562	Emergency down cable assembly	1
10	10000413	Cable connector	1
11	00001054	Screw GB/T 70.1 M4×12	1
12	00005377	Nut 1/2-20UNF	1
13	00003119	Coil	1
14	00005216	Solenoid valve spool	1
15	10013560	Valve cover	1
16	00000821	Screw GB/T 70.3 M5×12	3
17	10001172	Hose	1
18	10000462	Nut	1

502.1 Hydraulic Hoses and Fittings

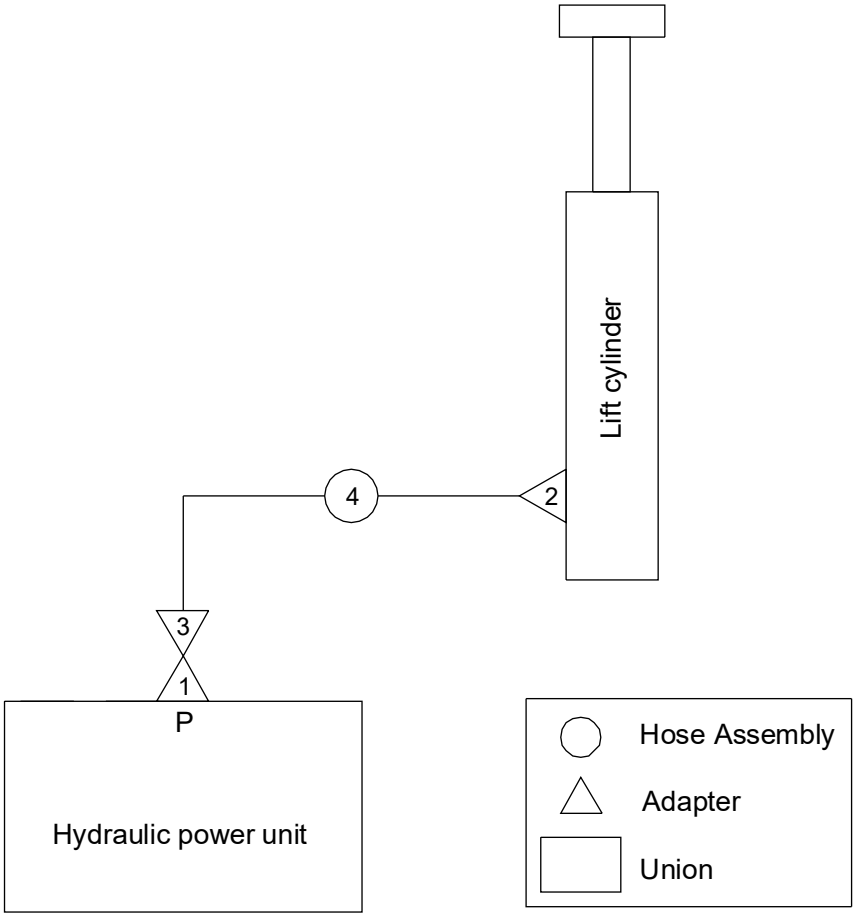

502.1 Hydraulic Hoses and Fittings

Item	Part No.	Description	Qty.
1	00001499	Straight fitting	1
2	00001291	Straight fitting	1
3	00001833	Elbow	1
4	00006990	Hose assembly	1

Section 6
Electrical System

601.1 Electrical Harness

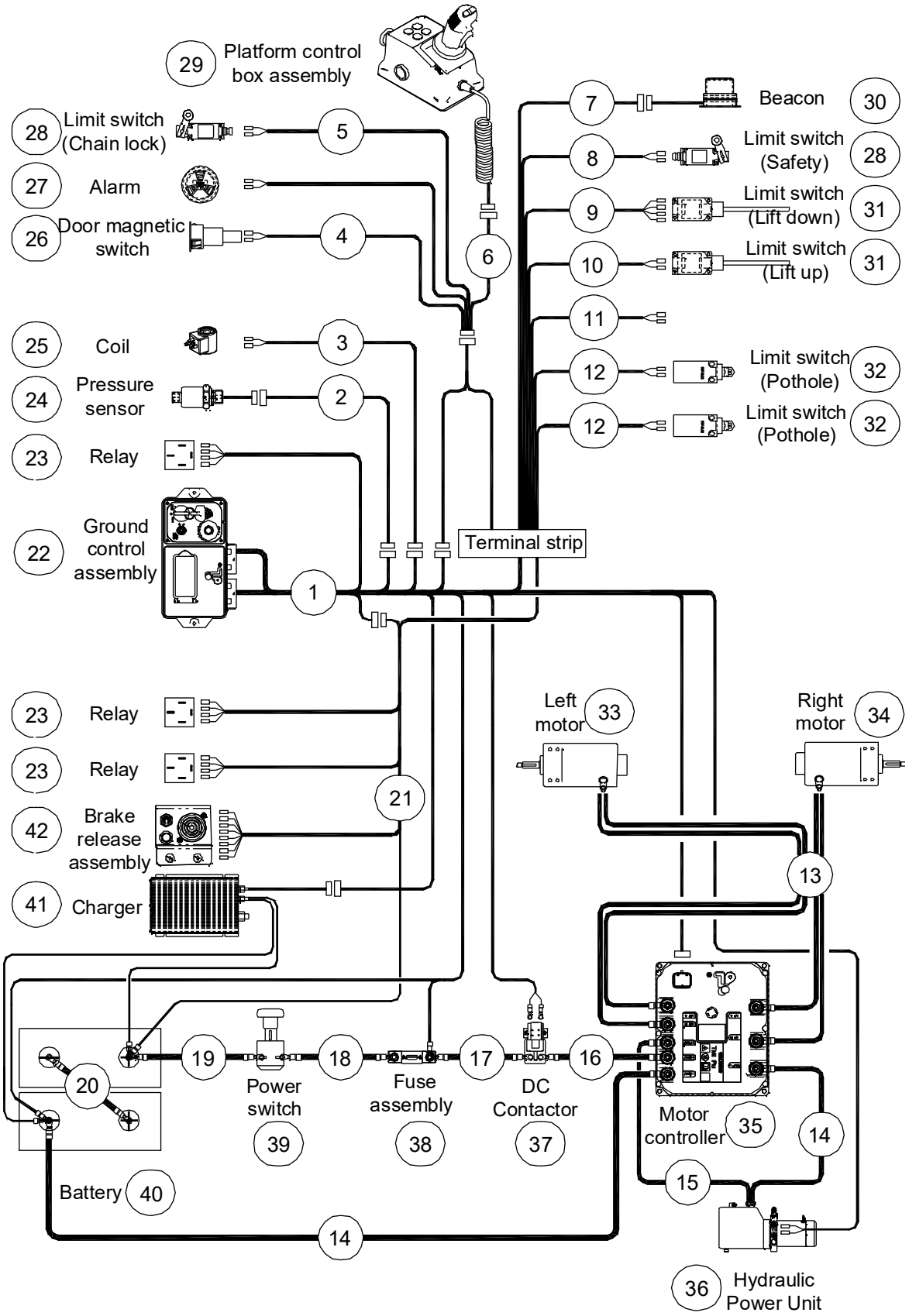

601.1 Electrical Harness

Item	Part No.	Description	Qty.
1	00003332	ECU harness	1
2	00007744	Pressure sensor harness	1
3	00006480	Lift down valve harness	1
4	00005311	Door magnetic switch harness	1
5	00005310	Limit switch harness, chain lock	1
6	00005317	Platform control box harness	1
7	00005315	Beacon Harness	1
8	00005313	Limit switch harness, safety	1
9	00005314	Limit switch harness, lift down	1
10	00005312	Limit switch harness, lift up	1
11	00005316	Sensor harness	1
12	00006761	Limit switch harness, pothole	2
13	00003346	Drive motor harness	1
14	00003344	Battery negative harness	2
15	00003345	Pump motor positive harness	1
16	00003343	Motor controller harness	1
17	00003333	DC contactor harness	1
18	00003341	Fuse harness	1
19	00003342	Battery positive harness	1
20	00003334	Battery harness	1
21	00007034	Emergency function harness	1
22		Ground control assembly (refer to 204.1)	1
23		Relay (refer to 202.1)	2
24		Pressure sensor (refer to 501.1)	1
25		Coil (refer to 501.1)	1
26		Door magnetic switch (refer to 401.1）	1
27		Alarm (refer to 402.1）	1
28		Limit switch, chain lock, safety (refer to 201.1, 201.2, 402.1)	2

601.1 Electrical Harness

Item	Part No.	Description	Qty.
29		Platform control box assembly (refer to 403.1)	1
30		Beacon (refer to 201.1, 201.2)	1
31		Limit switch, lift up, lift down (refer to 201.1, 201.2)	2
32		Limit switch, pothole (refer to 205.1)	2
33		Left motor (refer to 208.1)	1
34		Right motor (refer to 207.1)	1
35		Motor controller (refer to 202.1)	1
36		Hydraulic power unit (refer to 205.1)	1
37		DC Contactor (refer to 202.1)	1
38		130A Fuse (refer to 202.1)	1
39		Power switch (refer to 202.1)	1
40		Battery (refer to 202.1)	2
41		Charger (refer to 202.1)	1
42		Brake release assembly (refer to 209.1)	1