Parts Manual

Self-Propelled

Articulating Boom Lifts

GTBZ18A

GTBZ16A



Dingli Machinery

Part Number: SM0417213

Rev1.2, First Edition, August 2018 Printing

Version of the Record

Version Number	Created Date	Created By	Audit
SM0417213_Rev1.0	December 2017	Zhijiong Wei	Yutang Yu
SM0417213_Rev1.1	August 2018		
SM0417213_Rev1.2	August 2019		

Table of Contents

Foreword 1

Section 1 Chassis

Figure 1-1 Chassis 1-1
Figure 1-2 Chassis / Counterweight Installations (GTBZ18A Only) 1-4
Figure 1-3 Front Axle Assembly 4×4 1-6
Figure 1-4 Drive Motor Assembly with Fittings 1-9
Figure 1-5 Return Oil Manifold with Fittings 1-11
Figure 1-6 Oscillate Manifold with Fittings 1-13
Figure 1-7 Oscillate Manifold 1-15
Figure 1-8 Drive Manifold Assembly with Fittings 4×4 1-17
Figure 1-9 4×4 Drive Manifold Assembly 1-19

Section 2 Turntable

Figure 2-1 Turntable and Chassis Installations 2-1
Figure 2-2 Slew Drive Assembly 2-3
Figure 2-3 Rotary Coupling Assembly with Fittings 2-5
Figure 2-4 Engine Assembly Installation (Kubota) 2-7
Figure 2-5 Engine Assembly (Kubota) 2-9
Figure 2-6 Fuel Oil Tank and Function Manifold Installations 2-17
Figure 2-7 Battery System Assembly 2-20
Figure 2-8 Fuel Tank Assembly 2-22
Figure 2-9 Function Manifold Assembly with Fittings 2-24
Figure 2-10 Function Manifold Assembly 2-26
Figure 2-11 Synchronous Manifold with Fittings 2-29
Figure 2-12 Synchronous Manifold 2-31
Figure 2-13 Radiator Assembly with Fittings 2-33
Figure 2-14 Ground Control Box Assembly 2-35
Figure 2-15 Controller Assembly 2-38
Figure 2-16 Counterweight and Engine Hoods Installations 2-40
Figure 2-17 Hydraulic Tank Assembly 2-43
Figure 2-18 Engine Lower Hood Assembly 2-46
Figure 2-19 Engine Upper Hood Assembly 2-48
Figure 2-20 Fuel Oil Tank Hood Assembly 2-50

Figure 2-21 Hydraulic Generator Assembly 2-52

Section 3 Boom

Figure 3-1 Boom and Turntable Installations 3-1
Figure 3-2 Boom Assembly 3-3
Figure 3-3 Telescopic Boom Installation 3-6
Figure 3-4 Telescopic Boom Assembly 3-9
Figure 3-5 Jib Assembly Installation 3-11

Section 4 Platform

Figure 4-1 Platform Assembly Installation 4-1
Figure 4-2 Platform Assembly 4-3
Figure 4-3 Platform Control Box Assembly 4-6
Figure 4-4 Transition Manifold Assembly with Fittings 4-9
Figure 4-5 Transition Manifold Assembly 4-11

Section 5 Cylinder

Figure 5-1 Lower Lifting Cylinder Assembly 5-1
Figure 5-2 Mid Lifting Cylinder Assembly 5-3
Figure 5-3 Upper Lifting Cylinder Assembly 5-5
Figure 5-4 Telescope Cylinder Assembly 5-7
Figure 5-5 Slave Cylinder Assembly 5-9
Figure 5-6 Jib Cylinder Assembly 5-11
Figure 5-7 Left Axle Lockout Cylinder Assembly 5-13
Figure 5-8 Right Axle Lockout Cylinder Assembly 5-15
Figure 5-9 Steer Cylinder Assembly 5-17

Section 6 Hydraulic

Figure 6-1 Turntable- Hydraulic Circuit 6-1
Figure 6-2 Drive System Hydraulic Circuit 6-4
Figure 6-3 Steering and Oscillating Hydraulic Circuit 6-7
Figure 6-4 Hydraulic Generator Hydraulic Circuit (Option) 6-9
Figure 6-5 Functional Manifold Hydraulic Circuit 6-11

Section 7 Electrical

Figure 7-1 Harness Components Installation 7-1

Section 8 Decals

Figure 8-1 Decals Installation 8-1

Foreword

We are very appreciated for your interesting with Dingli machine and choosing it for your application. Our priority above all is you can use the machine safely for your application and you can benefit from the Dingli machine mostly. For these reason we hope you can:

1. Comply with employer, job site and local governmental rules.
2. The manual provides very important information about the machine. It is essential to the owner or the operator who use the machine. So we strongly recommend that you should read the manual thoroughly before attempting to do anything with the machine, so as to understand and follow the instruction or other information in the manual, especially the safety information.
3. Dingli cannot anticipate every possible circumstance that might involve a potential hazard. The warnings in this publication and on the product are, therefore, not all inclusive. If a tool, procedure, work method or operating technique that is not specifically recommended by Dingli is used, you must satisfy yourself that it is safe for you and for others. You should also ensure that the product will not be damaged or be made unsafe by the operation, lubrication, maintenance or repair procedure that you choose.
4. The information, specifications, and illustrations in this publication are on the basis of information that was available at the time that the publication was written. Due to the continuous improvements, Dingli reserve the rights to make the specifications changes without prior notification. Please contact with Dingli dealers or Dingli distributors to obtain the complete and most current information.
5. Any one who read the manual or used the machine, is encouraged to notify Dingli Machinery Co, Ltd of any errors or send in suggestions for improvement. All communications will be carefully considered for future printings of this and other manuals, certainly if you have any question about the machine, please contact with our team by dialing technical support phone, sending email, or any methods you want, etc. Our contact information as bellow:

   If you are in China Mainland, Please contact with:

   ## Zhejiang Dingli Machinery Co.,Ltd. Domestic Office:

   Phone: +86 572 8681766

   Fax: +86 572 8681700

   Email: sales@cndingli.com

   If you are out of the China Mainland, Please contact with:

   ## Zhejiang Dingli Machinery Co.,Ltd. International Office:

   Phone: +86 572 8681688

   Fax: +86 572 8681690

   Email: export@cndingli.com

Chassis

Section 1

Figure 1-1 Chassis

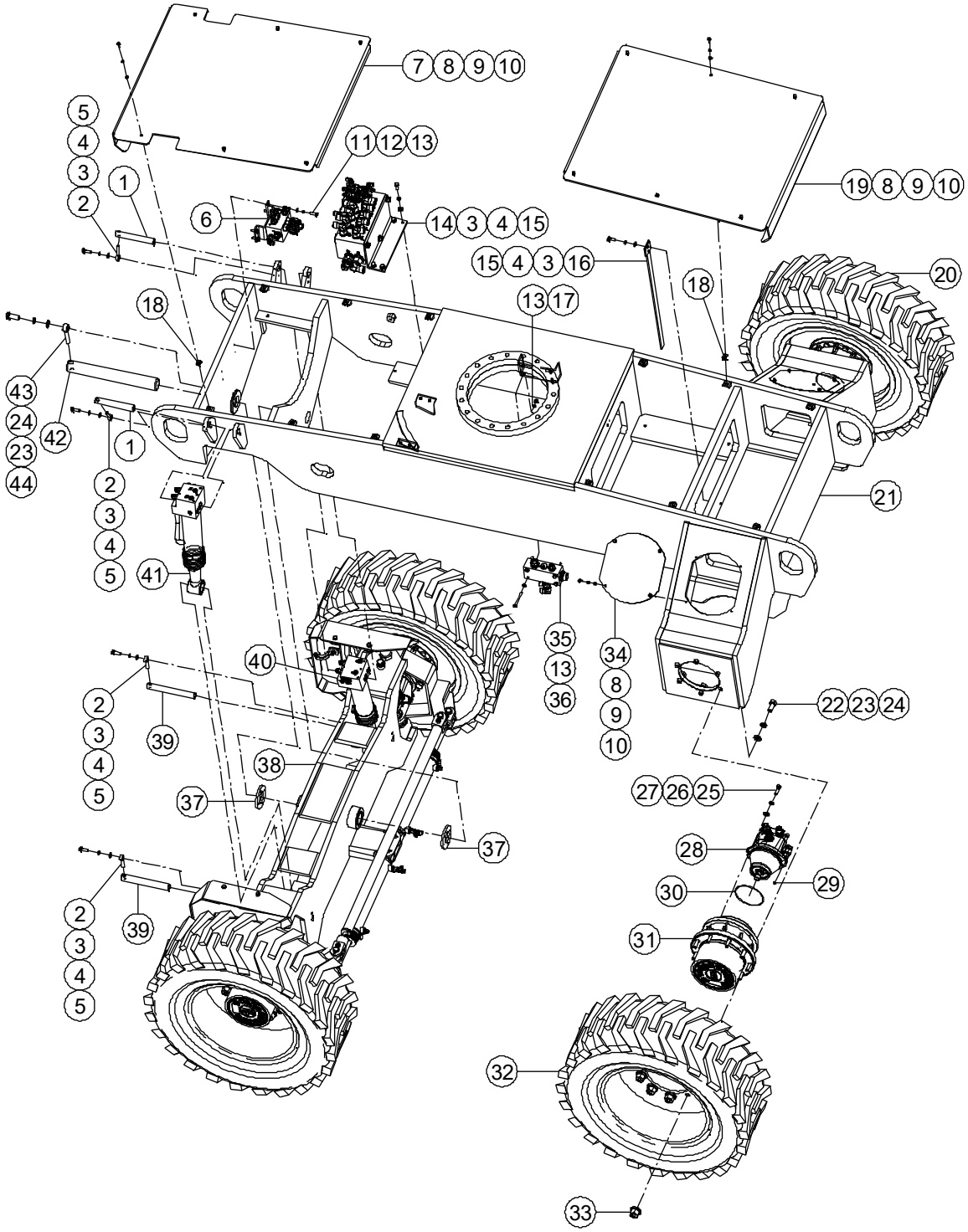

Figure 1-1 Chassis

Item	Part Number	Description	Qty.	Remark
1	00000075	895-25158 Pin, Pivot	2	
2	00000219	8902-10060 Pin, Lock	4	
3	00000615	Flat Washer GB/T 97.1 10	9	
4	00000679	Spring Washer GB/T 93 10	9	
5	00000683	Bolt GB/T 5783 M10 × 30	4	
6		Oscillate Manifold with Fittings *(See Figure 1-6 for Breakdown)*	1	
7	50002862	Cover	1	
8	00000620	Flat Washer GB/T 97.1 6	20	
9	00000621	Spring Washer GB/T 93 6	20	
10	00000619	Bolt GB/T 5783 M6 × 25	20	
11	00000993	Bolt GB/T 5783 M8 × 25	4	
12	00000609	Spring Washer GB/T 93 8	4	
13	00000608	Flat Washer GB/T 97.1 8	12	
14		Drive Manifold Assembly with Fittings *(See Figure 1-8 for Breakdown)*	1	
15	00000678	Bolt GB/T 5783 M10 × 25	5	
16	00000669	Ground Strap	1	
17	00000994	Nut GB/T 889.1 M8	4	
18	50000112	Nut, Reed	12	
19	50002861	Cover	1	
20	00003099	Tire and Wheel Assembly (Right Side)	1	
21	50002828	Chassis	1	
22	00003104	5/8-11 × 1 1/2" Heavy Hex Bolt ANSI B18.2.1	12	
23	00001035	Spring Washer GB/T 93 16	13	
24	00000997	Flat Washer GB/T 97.1 16	13	
25	00003115	7/16-14 × 1 1/2" Hex Cap Screw ANSI B18.2.1	4	
26	00000815	Spring Washer GB/T 93 12	4	
27	50005112	Flat Washer	4	

Figure 1-1 Chassis (Continued)

Item	Part Number	Description	Qty.	Remark
28		Drive Motor Assembly with Fittings *(See Figure 1-4 for Breakdown)*	2	
29	00001656	O-Ring As568A 6.07×1.78	2	
30	00001542	O-Ring As568A 120.32×2.62	2	
31	00003100	Drive Hub Assembly	2	Either-Or
	00003957	Drive Hub Assembly	2	
32	00003098	Tire and Wheel Assembly (Left Side)	1	
33	00002274	5/8-18UNF Nut	18	
34	50002863	Cover	2	
35		Return Oil Manifold with Fittings *(See Figure 1-5 for Breakdown)*	1	
36	00002185	Bolt GB/T 5780 M8 × 70	4	
37	00000323	8831-5008 Washer, Thrust	2	
38		Front Axle Assembly 4×4 *(See Figure 1-3 for Breakdown)*	1	
39	00000077	895-25198 Pin, Pivot	2	
40		Right Axle Lockout Cylinder Assembly *(See Figure 5-8 for Breakdown)*	1	
41		Left Axle Lockout Cylinder Assembly *(See Figure 5-7 for Breakdown)*	1	
42	00000135	895-50381 Pin, Pivot	1	
43	00000222	8902-16095 Pin, Lock	1	
44	00001057	Bolt GB/T 5783 M16 × 45	1	

Figure 1-2 Chassis / Counterweight Installations (GTBZ18A Only)

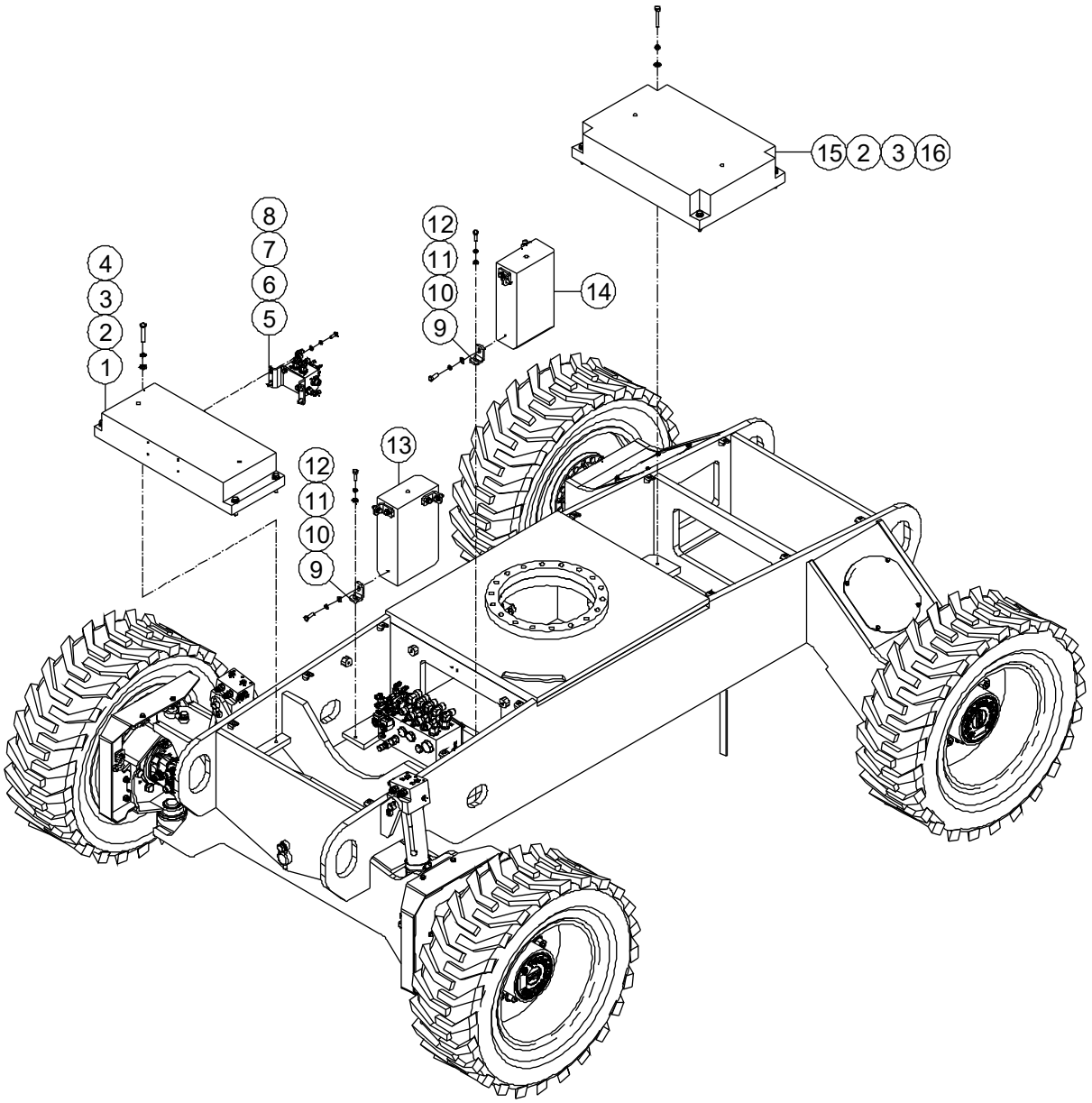

Figure 1-2 Chassis / Counterweight Installations (GTBZ18A Only)

Item	Part Number	Description	Qty.	Remark
1	50003294	Counterweight	1	
2	00000814	Flat Washer GB/T 97.1 12	8	
3	00000815	Spring Washer GB/T 93 12	8	
4	00002516	Bolt GB/T 5783 M12 × 65	4	
5		Oscillate Manifold with Fittings *(See Figure 1-6 for Breakdown)*	1	
6	00000608	Flat Washer GB/T 97.1 8	4	
7	00000609	Spring Washer GB/T 93 8	4	
8	00000993	Bolt GB/T 5783 M8 × 25	4	
9	50003297	Bracket	6	
10	00000615	Flat Washer GB/T 97.1 10	12	
11	00000679	Spring Washer GB/T 93 10	12	
12	00000683	Bolt GB/T 5783 M10 × 30	12	
13	50003295	Counterweight	1	
14	50003296	Counterweight	1	
15	50003293	Counterweight	1	
16	00001847	Bolt GB/T 5783 M12 × 70	4	

Figure 1-3 Front Axle Assembly 4×4

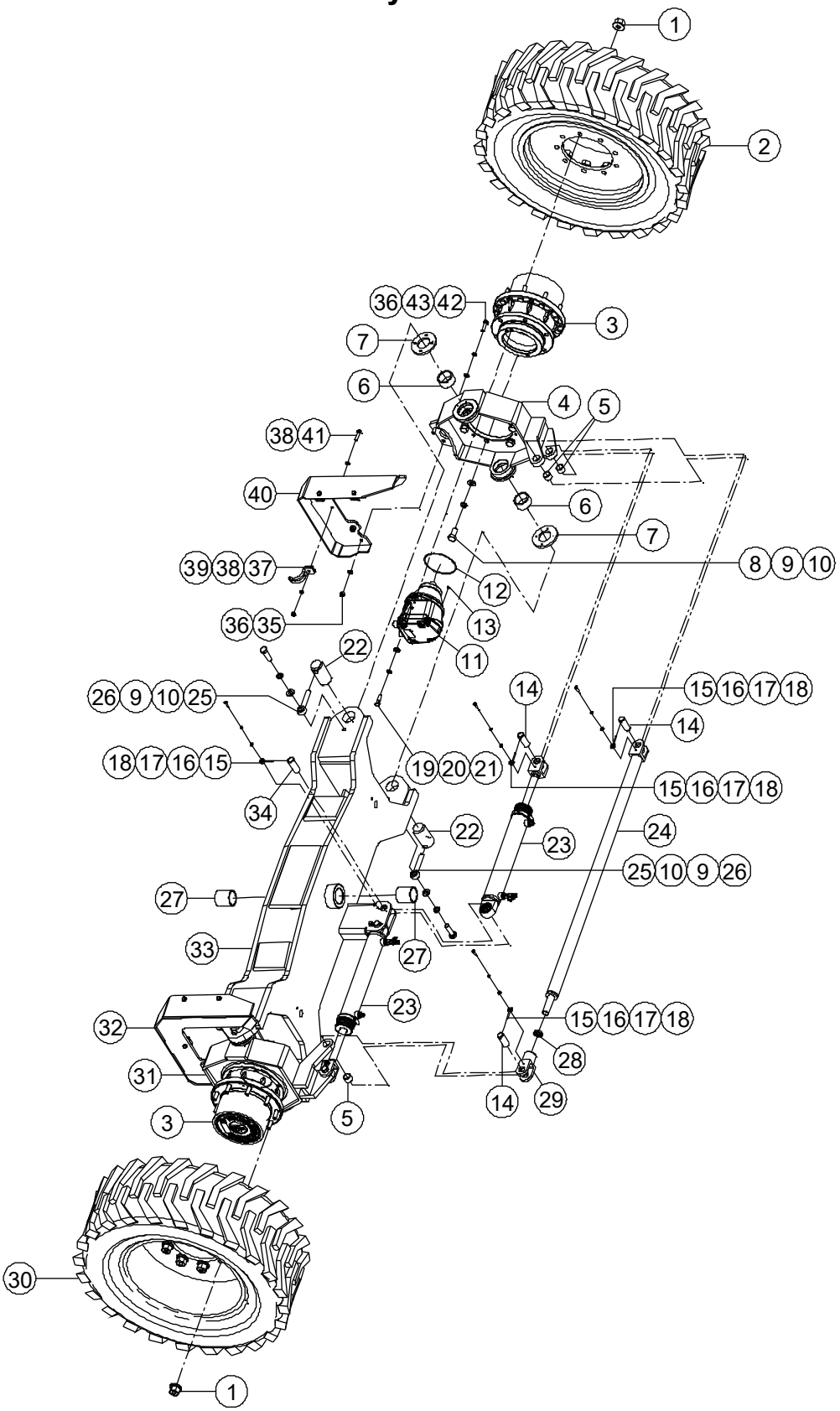

Figure 1-3 Front Axle Assembly 4×4

Item	Part Number	Description	Qty.	Remark
1	00002274	5/8-18UNF Nut	18	
2	00003099	Tire and Wheel Assembly (Right Side)	1	
3	00003100	Drive Hub Assembly	2	Either-Or
	00003957	Drive Hub Assembly	2	
4	50002885	Spindle Weldment (Right Side)	1	
5	00000364	8812-242820 Bushing	4	
6	00000330	8811-506030 Bushing	4	
7	00000323	8831-5008 Washer, Thrust	4	
8	00003104	5/8-11 × 1 1/2" Heavy Hex Bolt ANSI B18.2.1	12	
9	00001035	Spring Washer GB/T 93 16	16	
10	00000997	Flat Washer GB/T 97.1 16	16	
11		Drive Motor Assembly with Fittings *(See Figure 1-4 for Breakdown)*	2	
12	00001542	O-Ring As568A 120.32×2.62	2	
13	00001656	O-Ring As568A 6.07×1.78	2	
14	00000020	895-24055 Pin, Pivot	4	
15	00000217	8902-06045 Pin, Lock	6	
16	00000620	Flat Washer GB/T 97.1 6	6	
17	00000621	Spring Washer GB/T 93 6	6	
18	00000743	Bolt GB/T 5783 M6 × 20	6	
19	00003115	7/16-14 × 1 1/2" Hex Cap Screw ANSI B18.2.1	4	
20	00000815	Spring Washer GB/T 93 12	4	
21	50005112	Flat Washer	4	
22	00000124	895-50086 Pin, Pivot	4	
23		Steer Cylinder Assembly *(See Figure 5-9 for Breakdown)*	2	
24	50002895	Tie-Rod	1	
25	00000222	8902-16095 Pin, Lock	4	
26	00002339	Bolt GB/T 5783 M16 × 55	4	

Figure 1-3 Front Axle Assembly 4×4 (Continued)

Item	Part Number	Description	Qty.	Remark
27	00000428	8813-506060 Sleeve Bearing	2	
28	00003192	Nut GB/T 3763 M24×1.5	1	
29	50002898	Link, Steer	1	
30	00003098	Tire and Wheel Assembly (Left Side)	1	
31	50002900	Spindle Weldment (Left Side)	1	
32	50002882	Clamp	1	
33	50002865	Front Axle Weldment 4×4	1	
34	00000023	895-25060 Pin, Pivot	2	
35	00000682	Nut GB/T 889.1 M10	4	
36	00000615	Flat Washer GB/T 97.1 10	8	
37	10001580	Hoop	6	
38	00000608	Flat Washer GB/T 97.1 8	12	
39	00000994	Nut GB/T 889.1 M8	6	
40	50002878	Clamp	1	
41	00002604	Bolt GB/T 5783 M8 × 40	6	
42	00001041	Bolt GB/T 5783 M10 × 40	4	
43	00000679	Spring Washer GB/T 93 10	4	

Figure 1-4 Drive Motor Assembly with Fittings

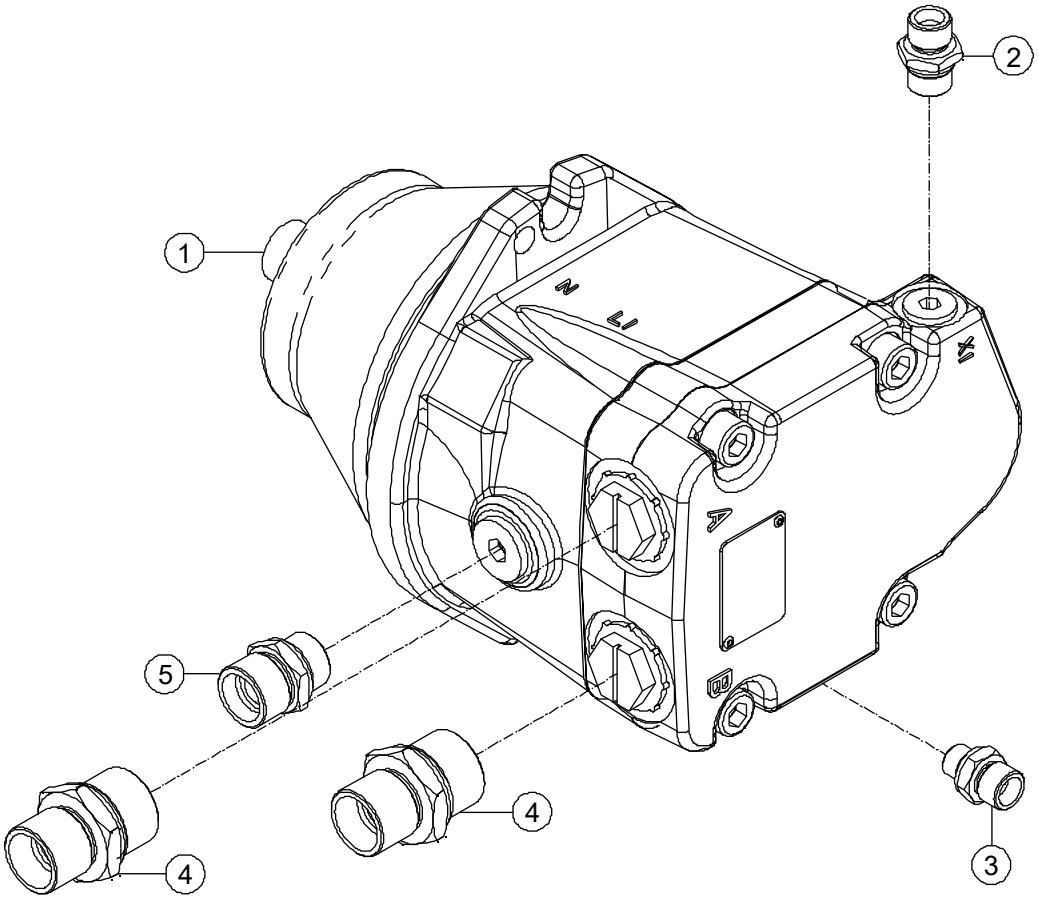

Figure 1-4 Drive Motor Assembly with Fittings

Item	Part Number	Description	Qty.	Remark
1	00006236	Drive Motor	1	
2	00002072	Fitting, Straight	1	
3	00001769	Fitting, Straight	1	
4	00002073	Fitting, Straight	2	
5	00001775	Fitting, Straight	1	

Figure 1-5 Return Oil Manifold with Fittings

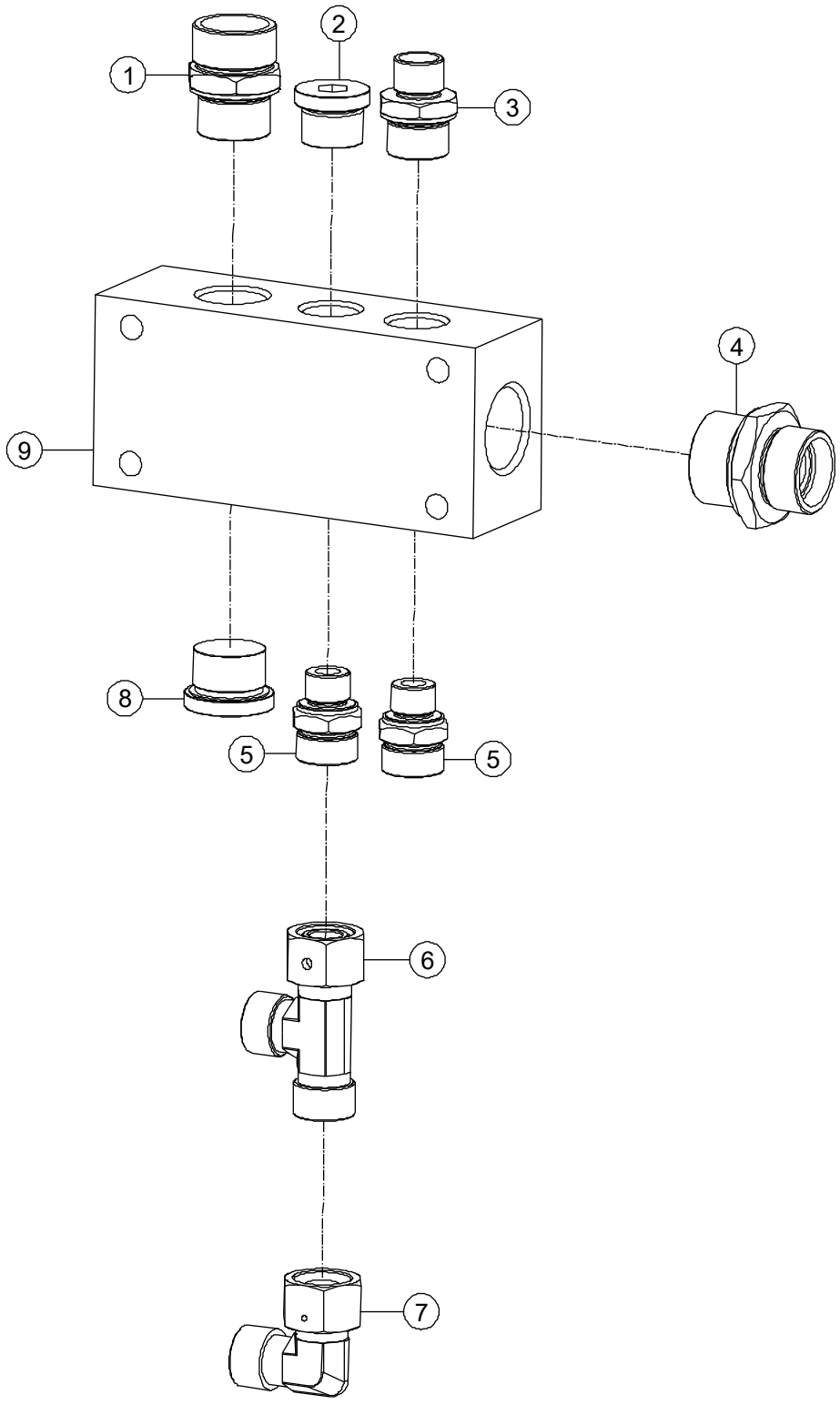

Figure 1-5 Return Oil Manifold with Fittings

Item	Part Number	Description	Qty.	Remark
1	00001269	Fitting, Straight	1	
2	00001077	Plug VSTI22×1.5ED	1	
3	00001263	Fitting, Straight	1	
4	00001272	Fitting, Straight	1	
5	00001265	Fitting, Straight	2	
6	00001240	Fitting, Tee	1	
7	00001835	Fitting, 90°	1	
8	00001078	Plug VSTI26×1.5ED	1	
9	00002183	Return Oil Block	1	

Figure 1-6 Oscillate Manifold with Fittings

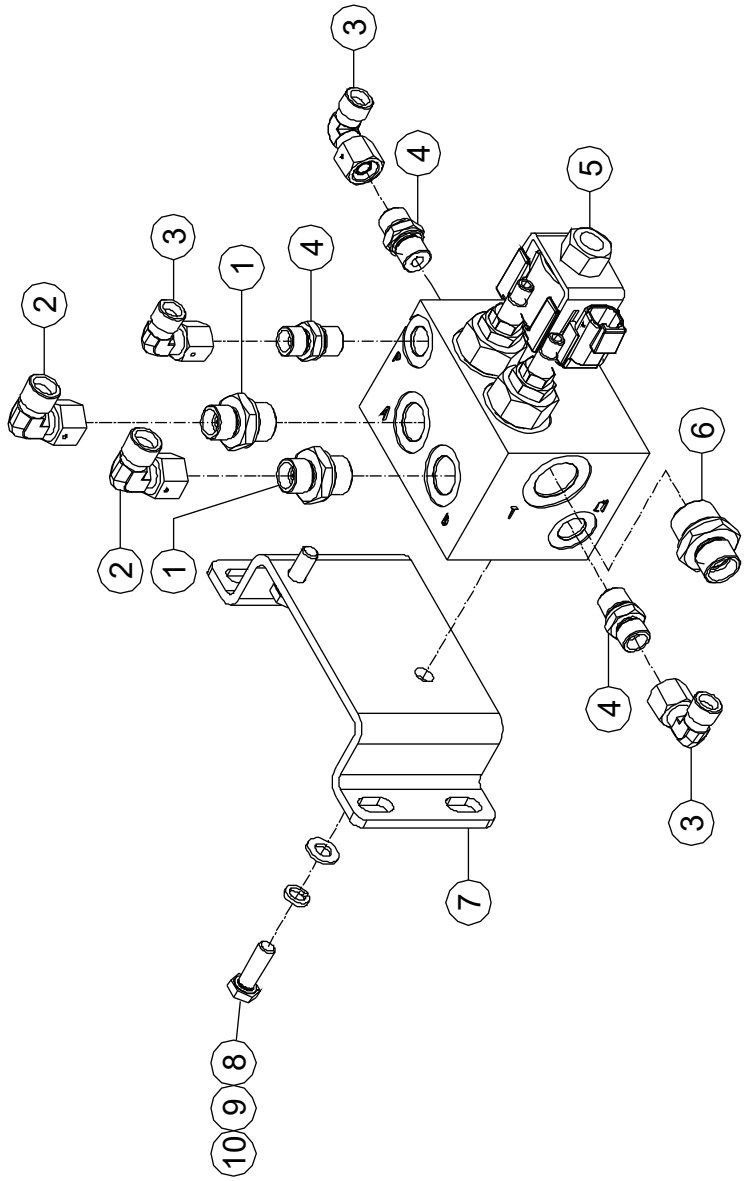

Figure 1-6 Oscillate Manifold with Fittings

Item	Part Number	Description	Qty.	Remark
1	00001292	Fitting, Straight	2	
2	00001833	Fitting, 90°	2	
3	00001832	Fitting, 90°	3	
4	00001282	Fitting, Straight	3	
5	00003800	Oscillate Manifold *(See Figure 1-7 for Breakdown)*	1	
6	00001263	Fitting, Straight	1	
7	50003033	Bracket	1	
8	00000993	Bolt GB/T 5783 M8 × 25	2	
9	00000609	Spring Washer GB/T 93 8	2	
10	00000608	Flat Washer GB/T 97.1 8	2	

Figure 1-7 Oscillate Manifold

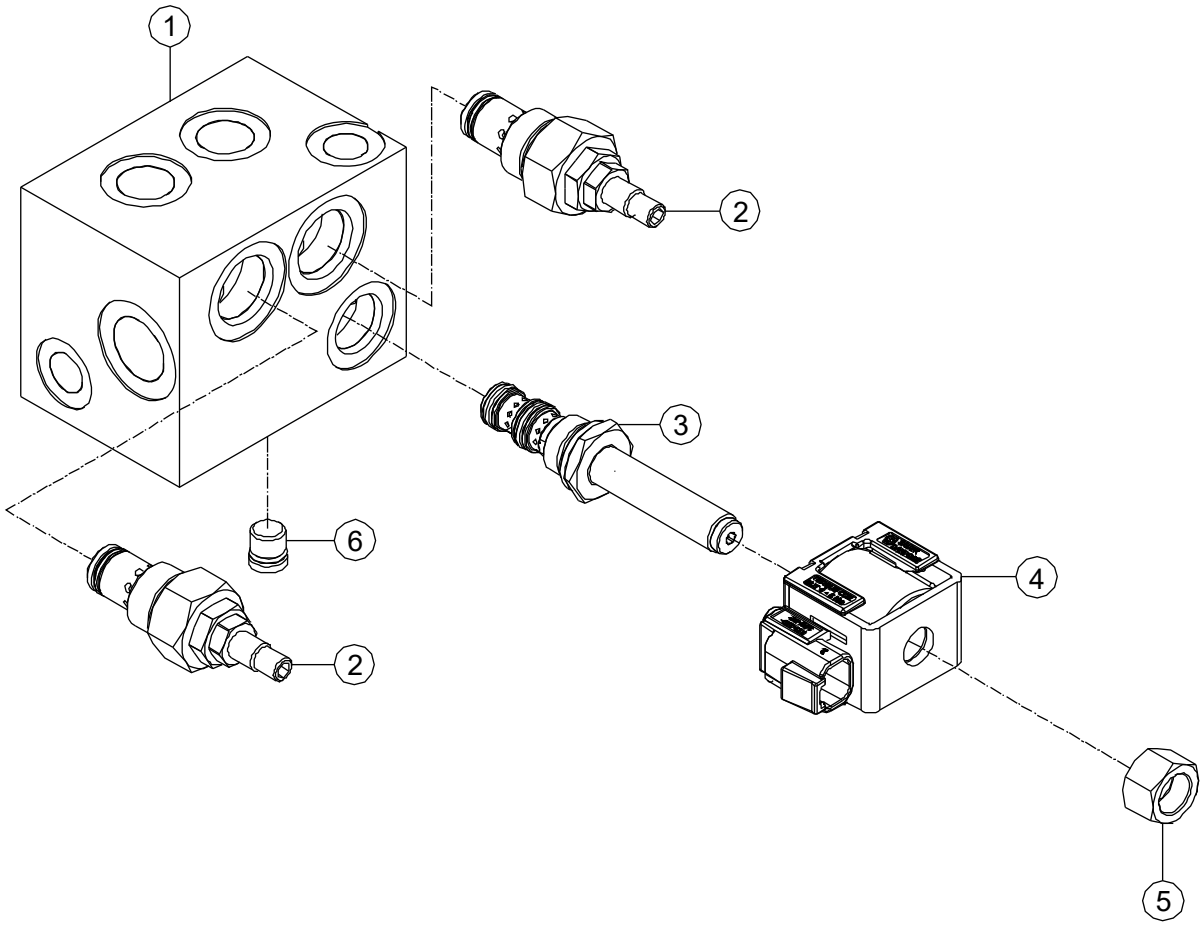

Figure 1-7 Oscillate Manifold

Item	Part Number	Description	Qty.	Remark
1	00003687	Body	1	
2	00003688	Cartridge, Throttle Valve	2	
3	00003301	Cartridge without Coil	1	
4	00003847	Coil	1	
5	00003722	Nut	1	
6	00004342	Plug SAE4	1	

Figure 1-8 Drive Manifold Assembly with Fittings 4×4

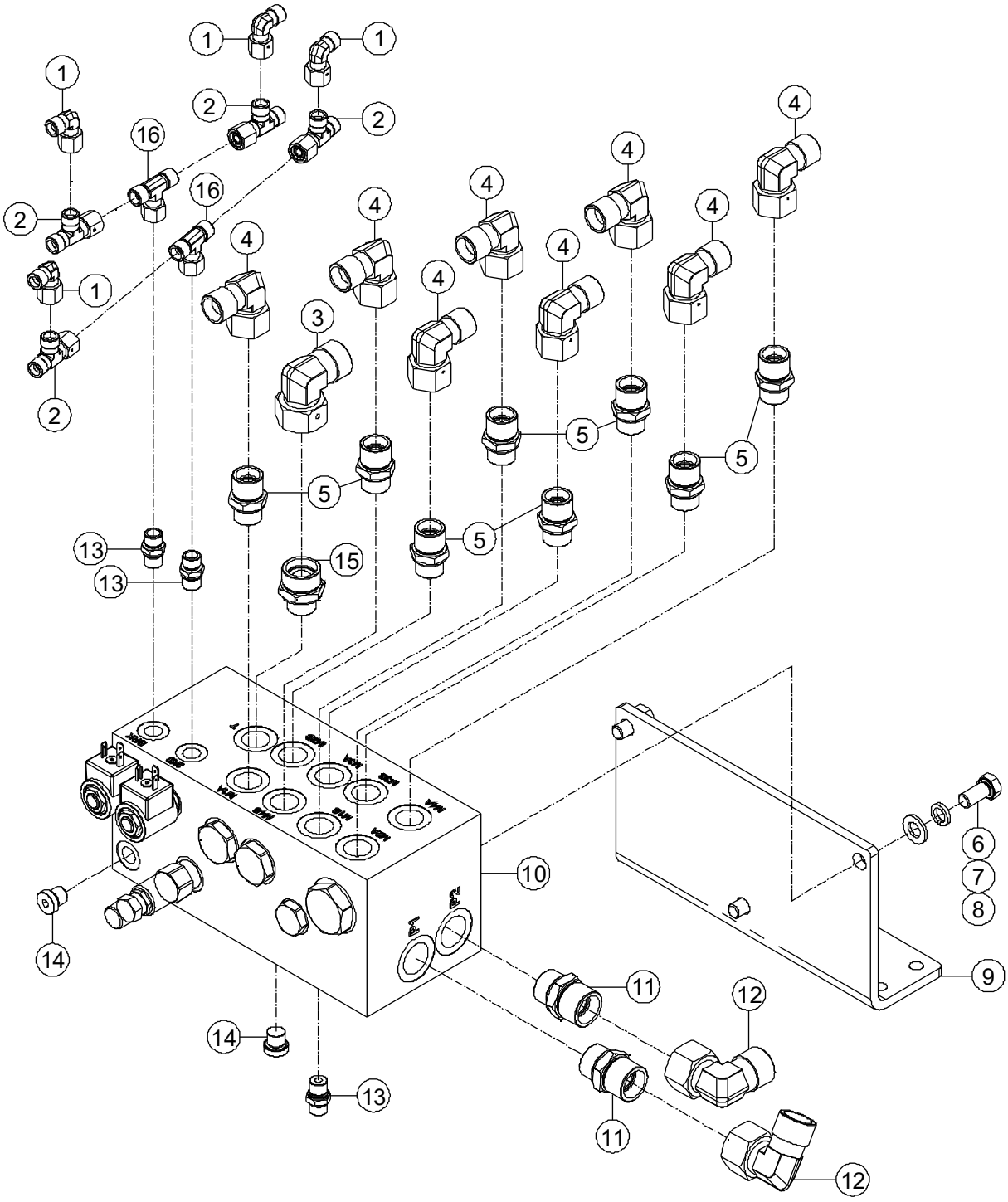

Figure 1-8 Drive Manifold Assembly with Fittings 4×4

Item	Part Number	Description	Qty.	Remark
1	00001832	Fitting, 90°	4	
2	00001237	Fitting, Tee	4	
3	00001836	Fitting, 90°	1	
4	00001841	Fitting, 90°	8	
5	00001283	Fitting, Straight	8	
6	00000816	Bolt GB/T 5783 M12 × 25	3	
7	00000815	Spring Washer GB/T 93 12	3	
8	00000814	Flat Washer GB/T 97.1 12	3	
9	50002857	Bracket	1	
10	00001861	4×4 Drive Manifold *(See Figure 1-9 for Breakdown)*	1	
11	00001285	Fitting, Straight	2	
12	00001842	Fitting, 90°	2	
13	00001282	Fitting, Straight	3	
14	00001073	Plug VSTI14×1.5ED	2	
15	00001270	Fitting, Straight	1	
16	00002118	Fitting, Tee	2	

Figure 1-9 4×4 Drive Manifold Assembly

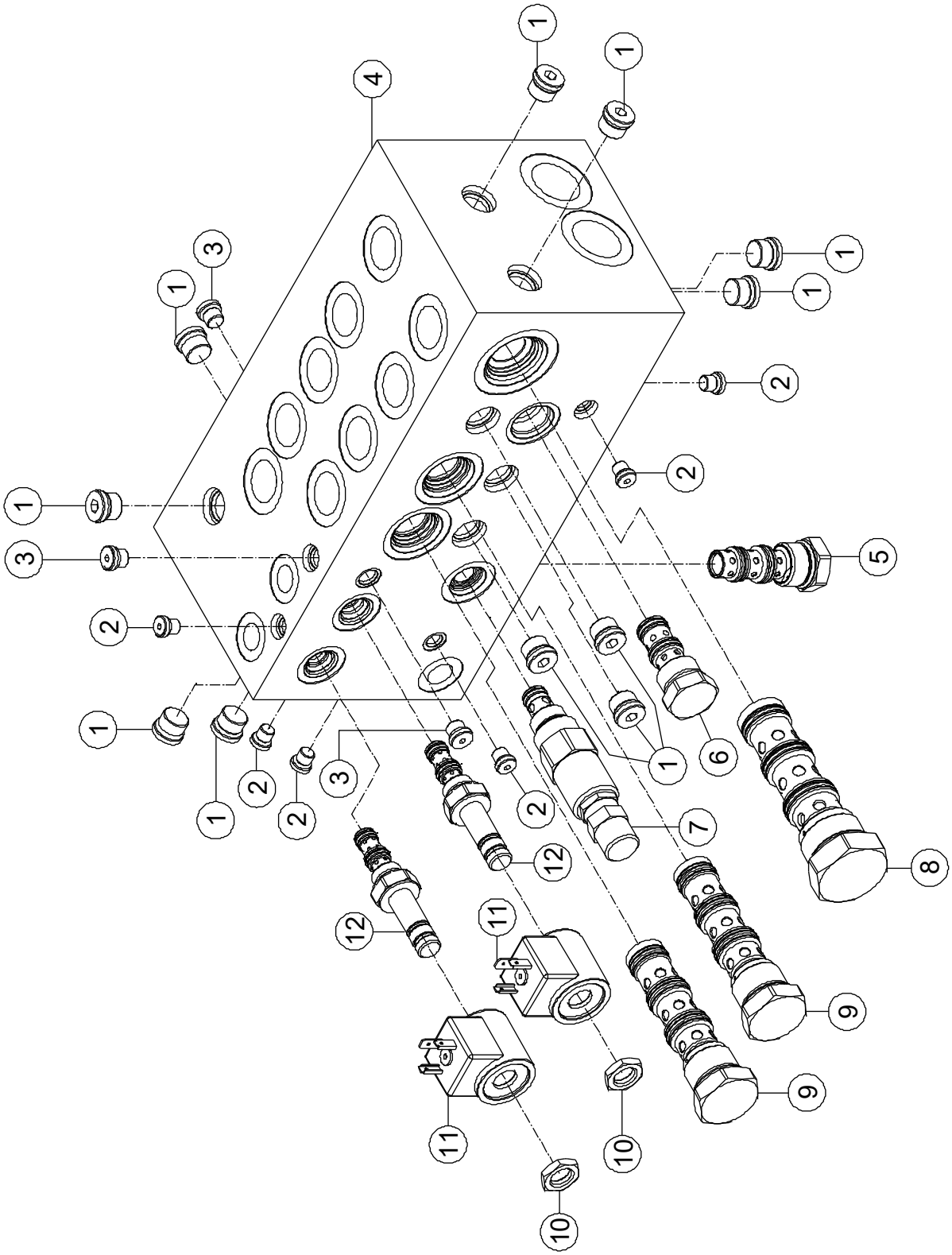

Figure 1-9 4×4 Drive Manifold Assembly

Item	Part Number	Description	Qty.	Remark
1	00003361	Plug SAE6	11	
2	00002999	Plug SAE2	6	
3	00002997	Plug SAE3	3	
4	00003917	Body	1	
5	00003920	Shuttle Valve	1	
6	00003921	Shuttle Valve	1	
7	00003922	Cartridge, Relief Valve	1	
8	00003919	Flow Control Valve	1	
9	00003918	Flow Control Valve	2	
10	00003017	Nut	2	
11	00002043	Coil	2	
12	00003916	Cartridge without Coil	2	

Turntable

Section 2

Figure 2-1 Turntable and Chassis Installations

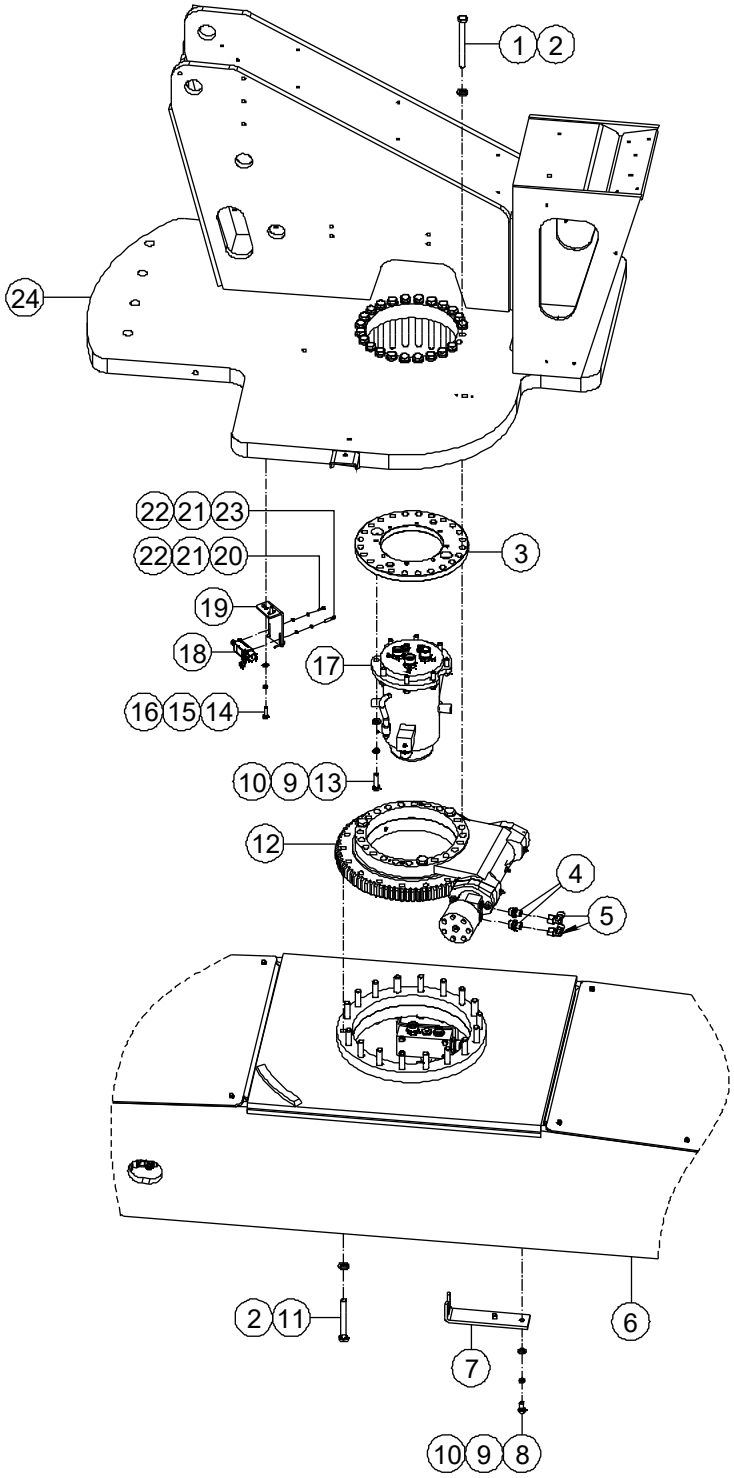

Figure 2-1 Turntable and Chassis Installations

Item	Part Number	Description	Qty.	Remark
1	00003105	Bolt GB/T 5782 M16 × 160	23	
2	00001102	Flat Washer 16 JB/ZQ 4080-2006	41	
3	50003010	Plate, Connecting	1	
4	00001774	Fitting, Straight	2	
5	00001834	Fitting, 90°	2	
6		Chassis 4×4 *(See Figure 1-1 for Breakdown)*	1	
7	50003011	Bracket	1	
8	00000816	Bolt GB/T 5783 M12 × 25	2	
9	00000815	Spring Washer GB/T 93 12	10	
10	00000814	Flat Washer GB/T 97.1 12	10	
11	00001109	Bolt GB/T 5782 M16 × 130	18	
12	00001972	Slew Drive Assembly *(See Figure 2-2 for Breakdown)*	1	
13	00002452	Bolt GB/T 5783 M12 × 45	8	
14	00000995	Bolt GB/T 5783 M8 × 30	2	
15	00000609	Spring Washer GB/T 93 8	2	
16	00000608	Flat Washer GB/T 97.1 8	2	
17		Rotary Coupling Assembly with Fittings *(See Figure 2-3 for Breakdown)*	1	
18	00000748	Switch, Limit	1	
19	50002962	Bracket, Switch	1	
20	00001246	Screw GB/T 70 M5 × 16	2	
21	00000606	Spring Washer GB/T 93 5	4	
22	00000605	Flat Washer GB/T 97.1 5	4	
23	00001253	Screw GB/T 70 M5 × 30	2	
24	50003012	Turntable	1	

Figure 2-2 Slew Drive Assembly

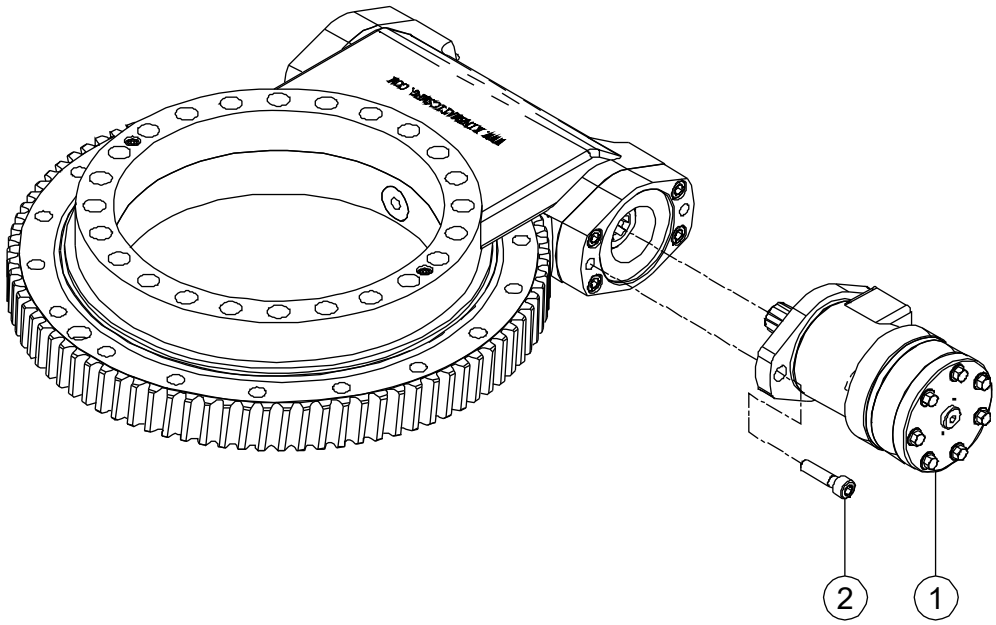

Figure 2-2 Slew Drive Assembly

Item	Part Number	Description	Qty.	Remark
1	00004403	Hydraulic Motor	1	
2	00002050	Screw GB/T 70 M10 × 40	2	

Figure 2-3 Rotary Coupling Assembly with Fittings

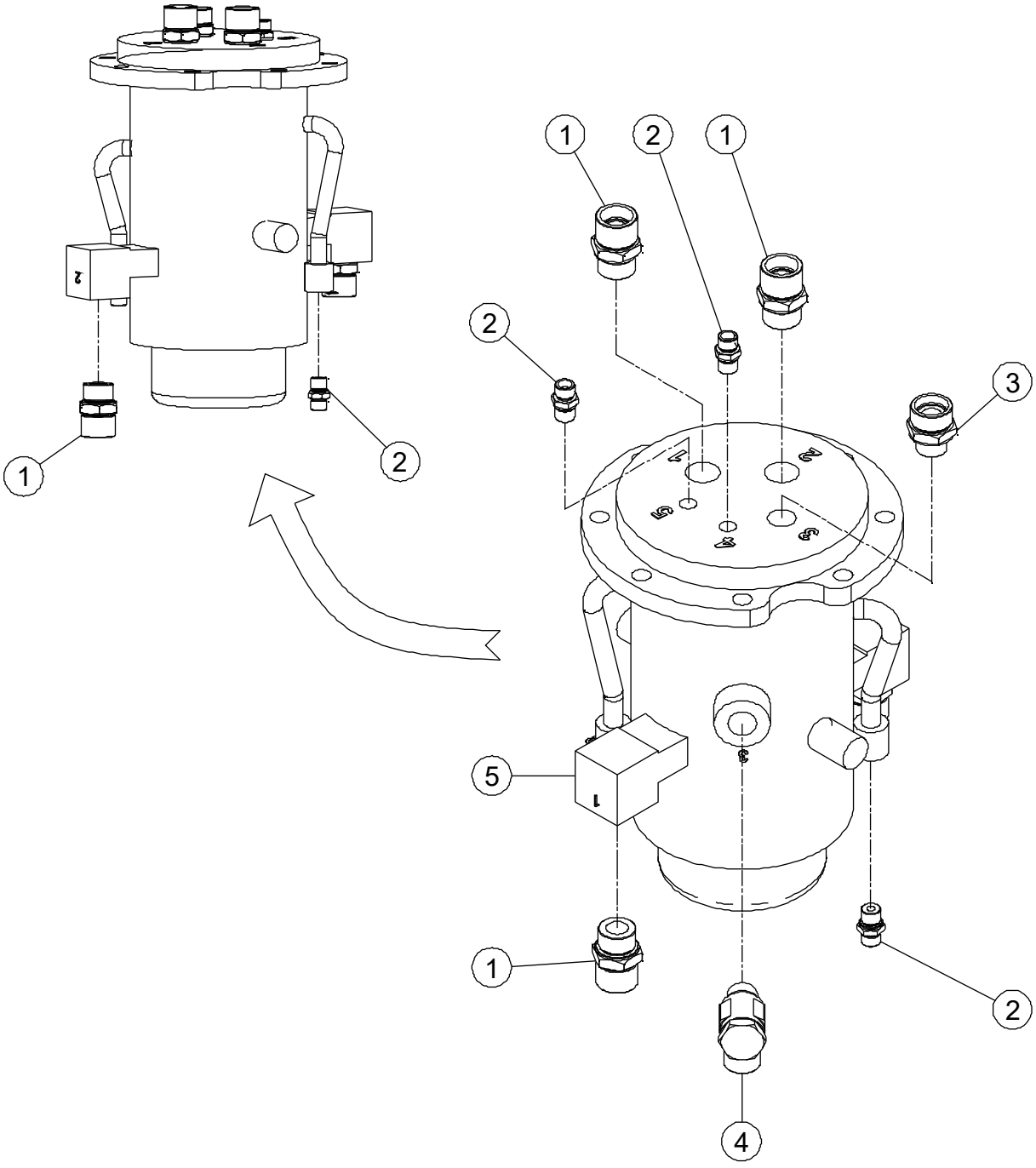

Figure 2-3 Rotary Coupling Assembly with Fittings

Item	Part Number	Description	Qty.	Remark
1	00001285	Fitting, Straight	4	
2	00001282	Fitting, Straight	4	
3	00001270	Fitting, Straight	1	
4	00003204	Fitting, 90°	1	
5	00003112	Rotary Coupling Assembly	1	

Figure 2-4 Engine Assembly Installation (Kubota)

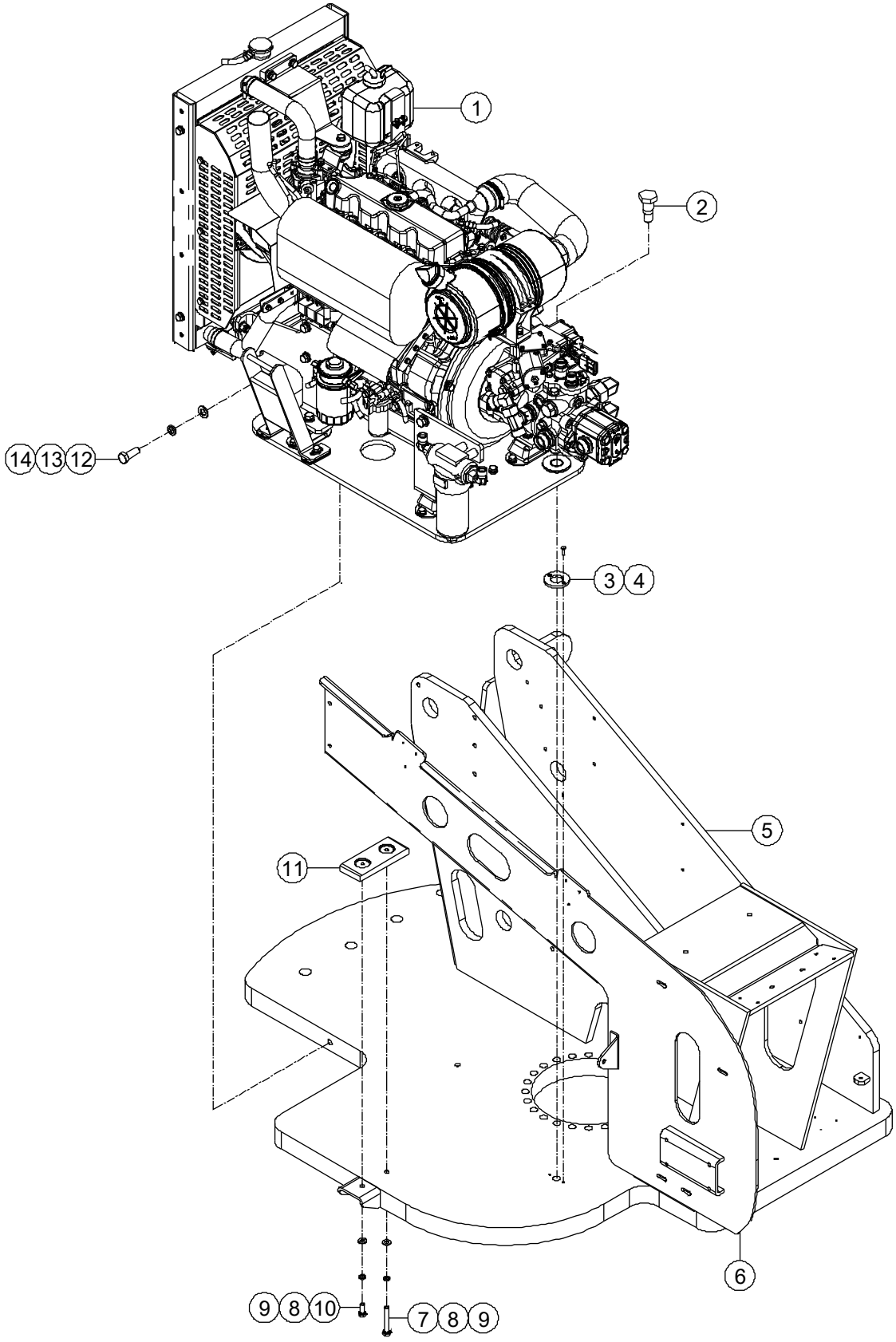

Figure 2-4 Engine Assembly Installation (Kubota)

Item	Part Number	Description	Qty.	Remark
1		Engine Assembly *(See Figure 2-5 for Breakdown)*	1	
2	50003025	Pin	1	
3	00000321	8831-3005 Washer, Thrust	1	
4	00000823	Screw GB/T 70.3 M5×20	2	
5	50003012	Turntable	1	
6	50003026	Plate	1	
7	00003106	Bolt GB/T 5783 M10 × 70	1	
8	00000679	Spring Washer GB/T 93 10	2	
9	00000615	Flat Washer GB/T 97.1 10	2	
10	00000678	Bolt GB/T 5783 M10 × 25	1	
11	50000402	Pad, Wear	1	
12	00001161	Bolt GB/T 5783 M16 × 40	1	
13	00001035	Spring Washer GB/T 93 16	1	
14	00000997	Flat Washer GB/T 97.1 16	1	

Figure 2-5 Engine Assembly (Kubota)

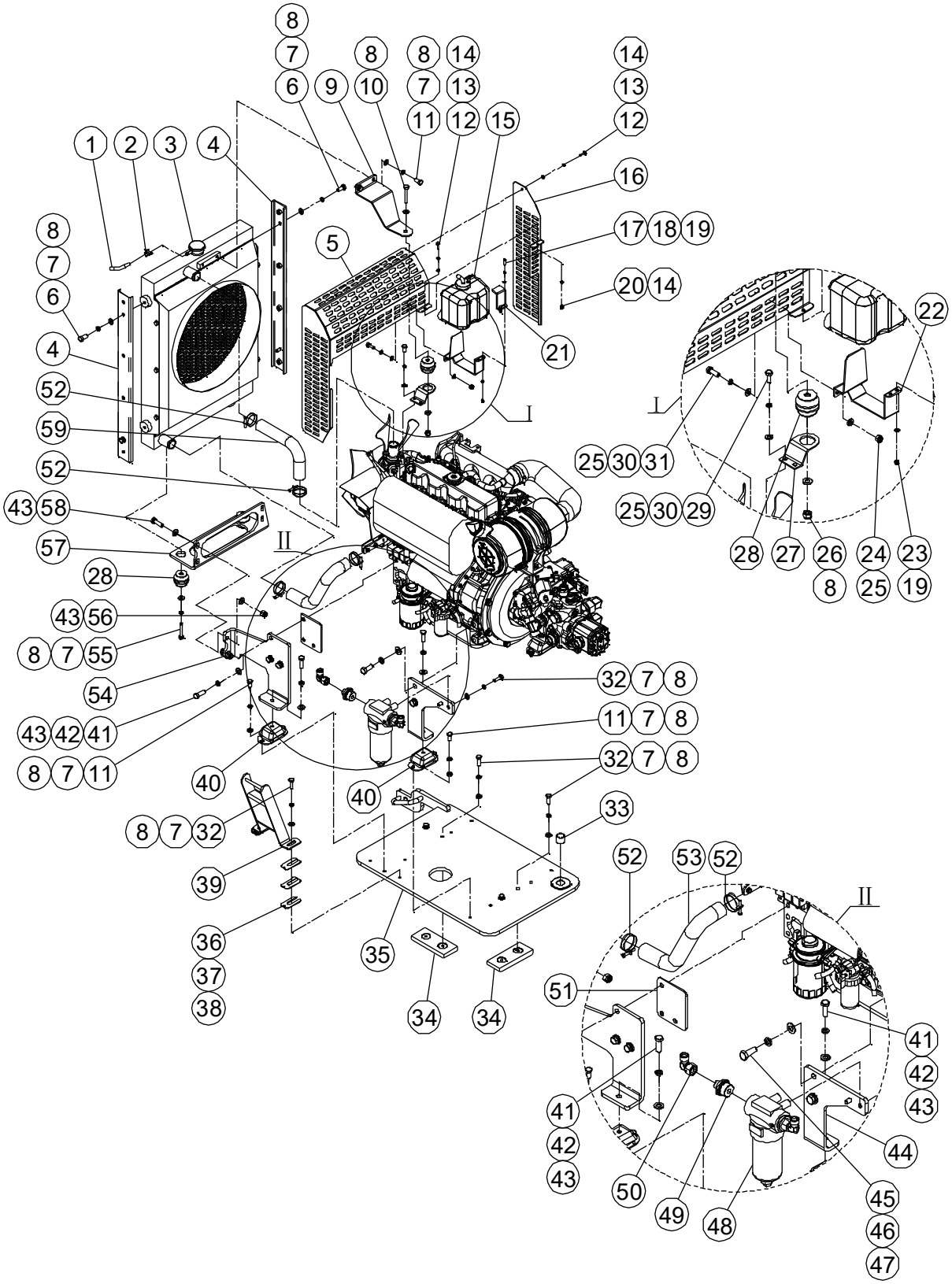

Figure 2-5 Engine Assembly (Kubota) (Continued)

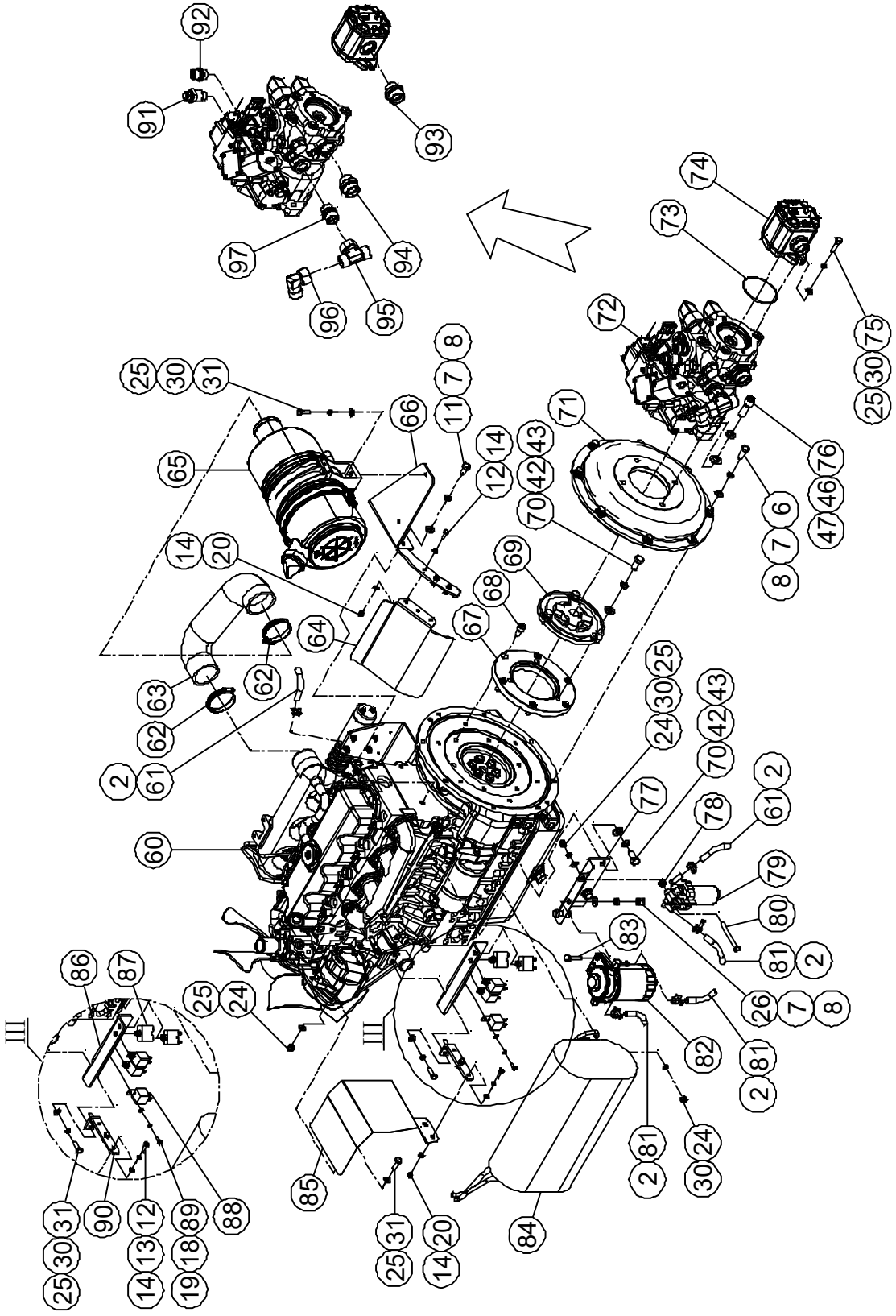

Figure 2-5 Engine Assembly (Kubota) (Continued)

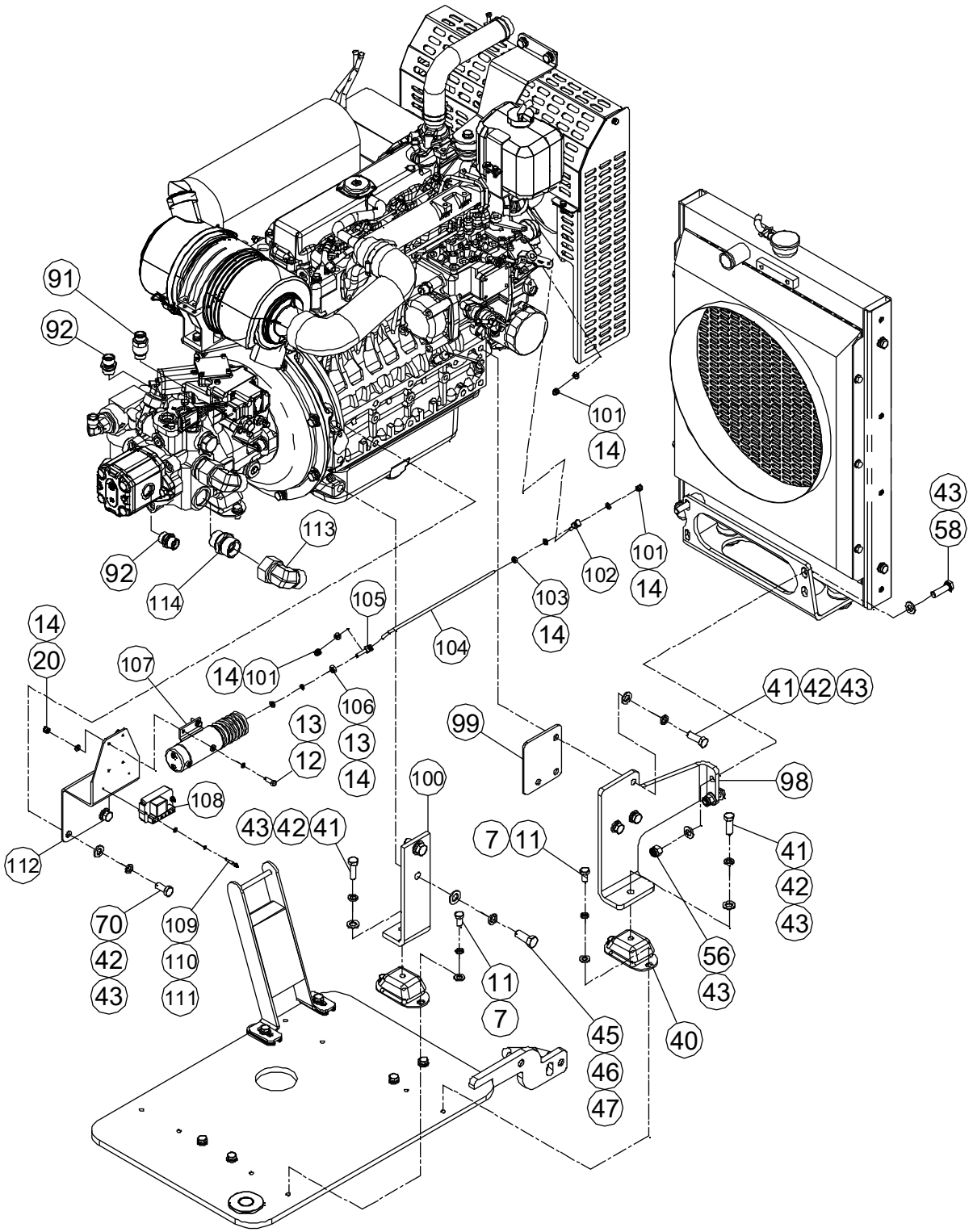

Figure 2-5 Engine Assembly (Kubota)

Item	Part Number	Description	Qty.	Remark
1	50003038	Hose	1	
2	50001592	Clamp 11-14	6	
3	00002155	Radiator	1	
4	50001579	Bracket	2	
5	50001532	Shield, Engine	1	
6	00000678	Bolt GB/T 5783 M10 × 25	12	
7	00000679	Spring Washer GB/T 93 10	36	
8	00000615	Flat Washer GB/T 97.1 10	38	
9	50001534	Bracket, Connection	1	
10	00002508	Bolt GB/T 5783 M10 × 60	1	
11	00000674	Bolt GB/T 5783 M10 × 20	12	
12	00000743	Bolt GB/T 5783 M6 × 20	11	
13	00000621	Spring Washer GB/T 93 6	9	
14	00000620	Flat Washer GB/T 97.1 6	26	
15	00002156	Bottle, Coolant Recovery	1	
16	50001531	Shield, Engine	1	
17	00002268	Bolt GB/T 5783 M5 × 20	2	
18	00000606	Spring Washer GB/T 93 5	5	
19	00000605	Flat Washer GB/T 97.1 5	7	
20	00000742	Nut GB/T 889.1 M6	10	
21	10001220	Plate	1	
22	10001218	Plate, Bracket	1	
23	00001169	Nut GB/T 889.1 M5	2	
24	00000994	Nut GB/T 889.1 M8	12	
25	00000608	Flat Washer GB/T 97.1 8	22	
26	00000682	Nut GB/T 889.1 M10	3	
27	50001566	Bracket	1	
28	00002251	Absorber, Rubber	3	
29	00000875	Bolt GB/T 5783 M8 × 20	1	

Figure 2-5 Engine Assembly (Kubota) (Continued)

Item	Part Number	Description	Qty.	Remark
30	00000609	Spring Washer GB/T 93 8	18	
31	00000993	Bolt GB/T 5783 M8 × 25	7	
32	00000683	Bolt GB/T 5783 M10 × 30	8	
33	00000369	8812-252825 Bushing	1	
34	50000402	Pad, Wear	2	
35	50002952	Tray, Engine	1	
36	50002960	Shim	2	
37	50002958	Shim	2	
38	50002959	Shim	2	
39	50002946	Seat, Lock	1	
40	00002162	Absorber, Rubber	4	
41	00002046	Bolt GB/T 5783 M12 × 35	10	
42	00000815	Spring Washer GB/T 93 12	17	
43	00000814	Flat Washer GB/T 97.1 12	25	
44	50002957	Bracket	1	
45	00002248	Bolt GB/T 5783 M14 × 35	4	
46	00001258	Spring Washer GB/T 93 14	6	
47	00001043	Flat Washer GB/T 97.1 14	6	
48	00001870	Charge Filter Assembly	1	
49	00002069	Fitting, Straight	2	
50	00001835	Fitting, 90°	2	
51	50001581	Plate	1	
52	50001582	Clamp 37-42	4	
53	00002257	Hose, Oil Cooler	1	
54	50001556	Plate, Engine Mounting	1	
55	00002255	Bolt GB/T 5783 M10 × 55	2	
56	00001056	Nut GB/T 889.1 M12	4	
57	50001571	Bracket	1	
58	00001055	Bolt GB/T 5783 M12 × 40	4	

Figure 2-5 Engine Assembly (Kubota) (Continued)

Item	Part Number	Description	Qty.	Remark
59	00002256	Hose, Oil Cooler	1	
60	00002152	Engine Assembly	1	
--	10003947	Element, Filter (Not Shown)	1	
61	50003037	Hose	2	
62	50001583	Clamp 52-76	2	
63	00002259	Elbow, Rubber	1	
64	50001560	Plate	1	
65	00002157	Air Cleaner	1	
--	10004082	Element, Filter (Not Shown)	1	
66	50001563	Bracket, Air Cleaner	1	
67	50001561	Plate	1	
68	00002249	Screw GB/T 70 M10 × 20	6	
69	00002158	Flexible Coupling, Pump	1	
70	00000816	Bolt GB/T 5783 M12 × 25	7	
71	50001575	Plate, Pump Adapter	1	
72	00006633	Drive Pump Assembly	1	
73	00001536	O-Ring As568A 82.22×2.62	1	
74	00003102	Function Pump Assembly	1	Either-Or
	00004604	Function Pump Assembly	1	
75	00003194	3/8-16 × 1 1/4" Hex Bolt ANSI B18.2.1	2	
76	00003193	Screw GB/T 70 M14 × 40	2	
77	50003114	Plate, Fuel Filter	1	
78	50001586	Spacer	1	
79	00002261	Fuel / Water Separator	1	
--	10003966	Element, Filter (Not Shown)	1	
80	00002265	Bolt GB/T 5780 M8 × 80	1	
81	50003036	Hose	3	
82	00002260	Fuel Filter	1	
--	10003957	Element, Filter (Not Shown)	1	

Figure 2-5 Engine Assembly (Kubota) (Continued)

Item	Part Number	Description	Qty.	Remark
83	00000684	Bolt GB/T 5783 M10 × 35	2	
84	00003097	Muffler	1	
85	50001557	Plate	1	
86	50002945	Bracket, Relay	1	
87	00002208	Circuit Breaker	2	
88	00002206	Relay	3	
89	00001252	Screw GB/T 70 M5 × 12	3	
90	50001578	Plate	1	
91	00003734	Fitting, Straight	1	
92	00001776	Fitting, Straight	2	
93	00001782	Fitting, Straight	1	
94	00001783	Fitting, Straight	1	
95	00002123	Fitting, Tee	1	
96	00001836	Fitting, 90°	1	
97	00001780	Fitting, Straight	1	
98	50001555	Plate, Engine Mounting	1	
99	50001577	Plate	1	
100	50001562	Plate, Engine Mounting	1	
101	00001033	Nut GB/T 6182 M6	3	
102	10002731	Bolt-Shoulder	1	
103	00002247	Nut GB/T 6170 M6	1	
104	10003667	Throttle-Linkage	1	
105	10002730	Throttle Screw	1	
106	00002266	1/4-28 Heavy Hexagon Nut ANSI B18.2.2	1	
107	00002203	Actuator, Throttle	1	
108	00002204	Module, Throttle	1	
109	00002228	Screw GB/T 70 M4 × 25	2	
110	00000779	Spring Washer GB/T 93 4	2	
111	00000778	Flat Washer GB/T 97.1 4	2	

Figure 2-5 Engine Assembly (Kubota) (Continued)

Item	Part Number	Description	Qty.	Remark
112	50003035	Plate, Bracket	1	
113	00001843	Fitting, 90°	2	
114	00001790	Fitting, Straight	2	

Figure 2-6 Fuel Oil Tank and Function Manifold Installations

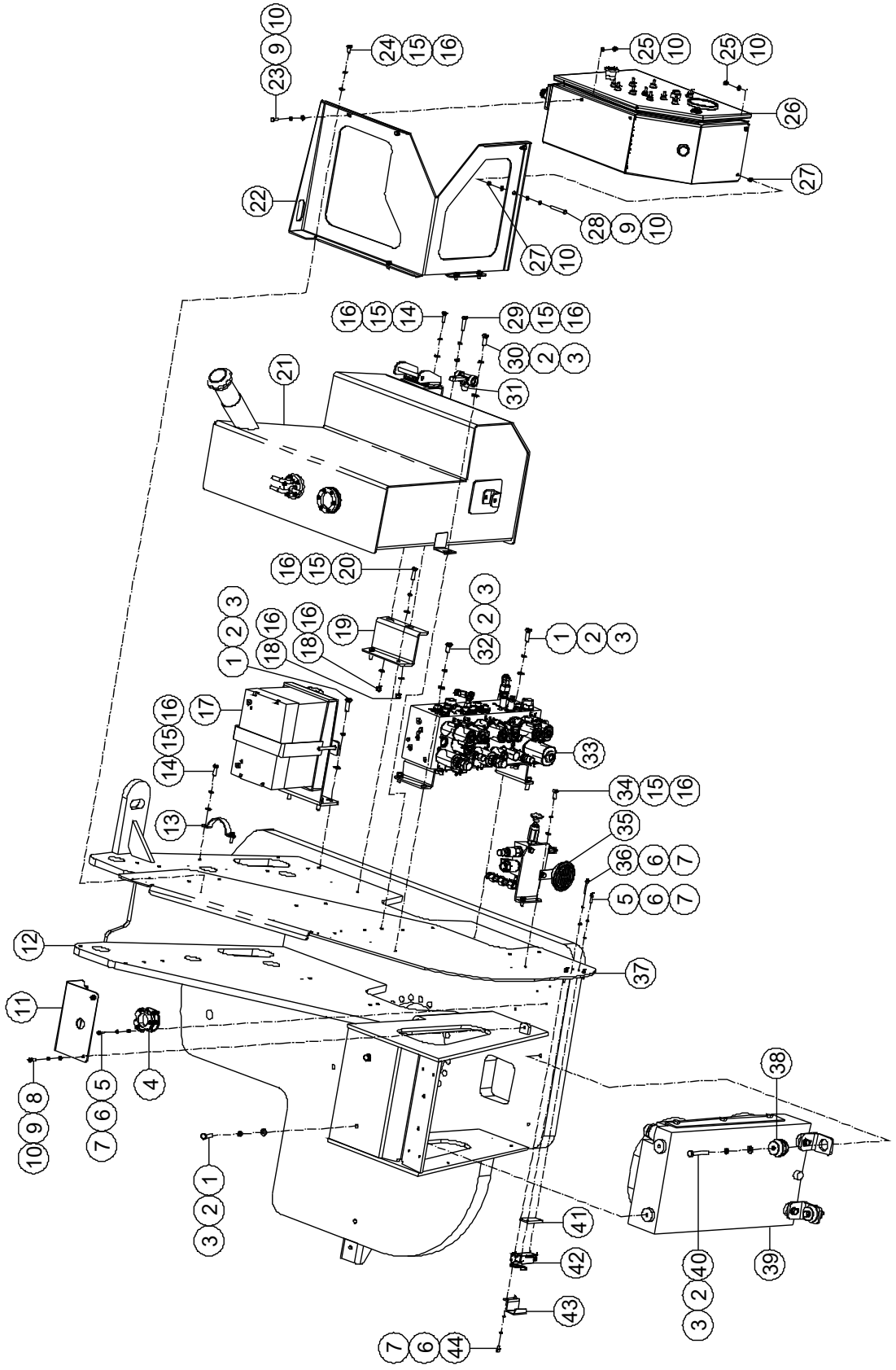

Figure 2-6 Fuel Oil Tank and Function Manifold Installations

Item	Part Number	Description	Qty.	Remark
1	00000683	Bolt GB/T 5783 M10 × 30	7	
2	00000679	Spring Washer GB/T 93 10	13	
3	00000615	Flat Washer GB/T 97.1 10	13	
4	00000642	Sensor, Tilt	1	
5	00000817	Screw GB/T 70 M5 × 20	5	
6	00000606	Spring Washer GB/T 93 5	9	
7	00000605	Flat Washer GB/T 97.1 5	9	
8	00000774	Screw GB/T 70 M6 × 20	4	
9	00000621	Spring Washer GB/T 93 6	8	
10	00000620	Flat Washer GB/T 97.1 6	14	
11	50002826	Shield, Sensor	1	
12	50003012	Turntable	1	
13	50000554	Hoop	1	
14	00000993	Bolt GB/T 5783 M8 × 25	3	
15	00000609	Spring Washer GB/T 93 8	12	
16	00000608	Flat Washer GB/T 97.1 8	14	
17		Battery System Assembly *(See Figure 2-7 for Breakdown)*	1	
18	00000994	Nut GB/T 889.1 M8	2	
19	50002785	Plate, Bracket	1	
20	00000995	Bolt GB/T 5783 M8 × 30	2	
21		Fuel Tank Assembly *(See Figure 2-8 for Breakdown)*	1	
22	50002911	Plate, Bracket	1	
23	00000743	Bolt GB/T 5783 M6 × 20	2	
24	00001063	Bolt GB/T 5783 M8 × 16	4	
25	00000742	Nut GB/T 889.1 M6	4	
26		Ground Control Box Assembly *(See Figure 2-14 for Breakdown)*	1	
27	00002247	Nut GB/T 6170 M6	4	

Figure 2-6 Fuel Oil Tank and Function Manifold Installations (Continued)

Item	Part Number	Description	Qty.	Remark
28	00002506	Bolt GB/T 5783 M6 × 55	2	
29	00002488	Bolt GB/T 5783 M8 × 35	1	
30	00000678	Bolt GB/T 5783 M10 × 25	2	
31	50003298	Fitting, Tee	1	
32	00000674	Bolt GB/T 5783 M10 × 20	2	
33		Function Manifold Assembly with Fittings *(See Figure 2-9 for Breakdown)*	1	
34	00000875	Bolt GB/T 5783 M8 × 20	2	
35		Synchronous Manifold with Fittings *(See Figure 2-11 for Breakdown)*	1	
36	00002269	Screw GB/T 70 M5 × 35	2	
37	50003009	Plate, Bracket	1	
38	00002251	Absorber, Rubber	2	
39		Radiator Assembly with Fittings *(See Figure 2-13 for Breakdown)*	1	
40	00002512	Bolt GB/T 5782 M10 × 70	2	
41	50002819	Bracket	1	
42	00000748	Switch, Limit	1	
43	50002963	Shield, Switch	1	
44	00001252	Screw GB/T 70 M5 × 12	2	

Figure 2-7 Battery System Assembly

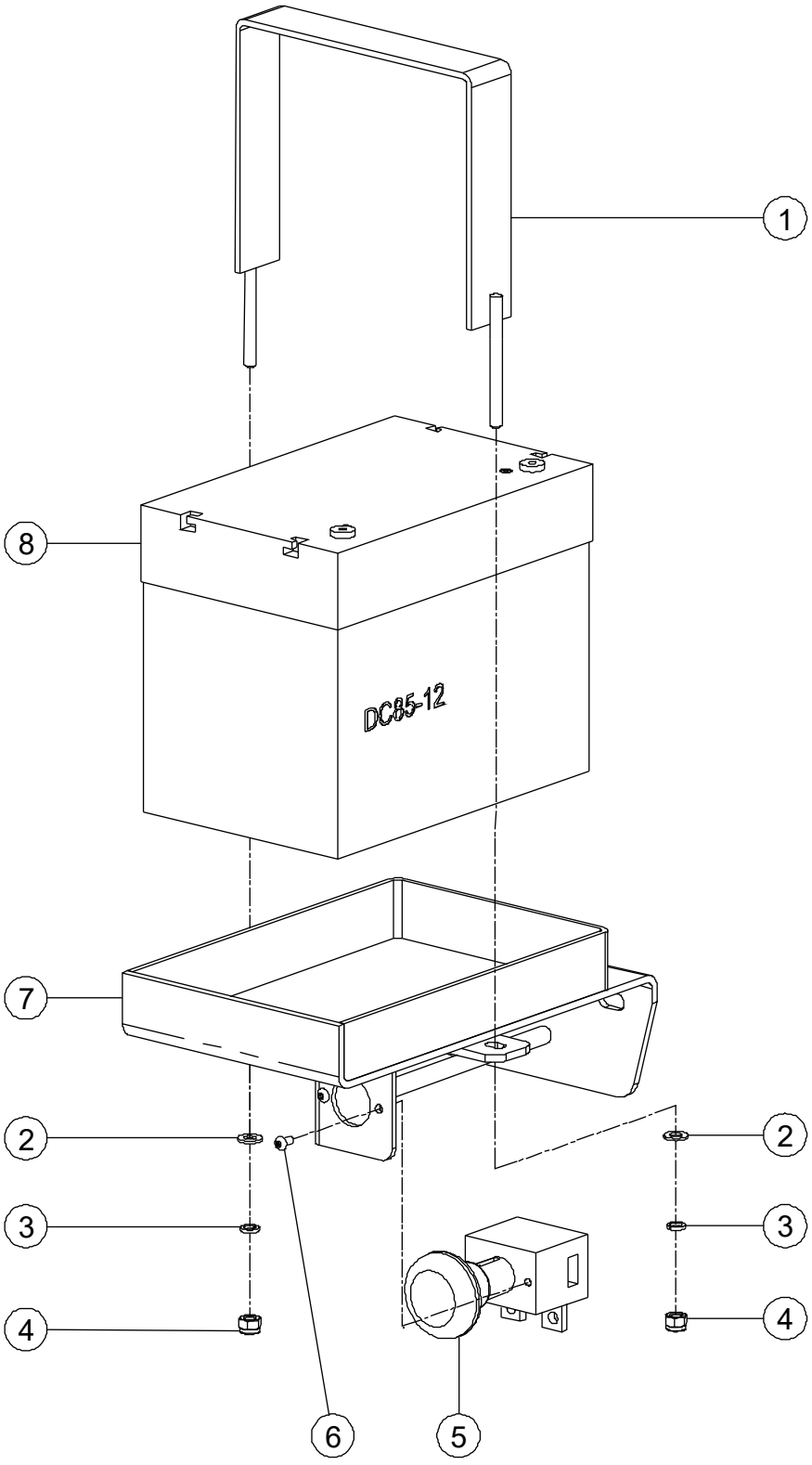

Figure 2-7 Battery System Assembly

Item	Part Number	Description	Qty.	Remark
1	50002982	Clamp, Accumulator	1	
2	00000608	Flat Washer GB/T 97.1 8	2	
3	00000609	Spring Washer GB/T 93 8	2	
4	00000994	Nut GB/T 889.1 M8	2	
5	00000655	Power Switch	1	
6	00001229	Screw GB/T 70.2 M5×10	2	
7	50004879	Plate, Bracket	1	
8	00004485	Battery	1	

Figure 2-8 Fuel Tank Assembly

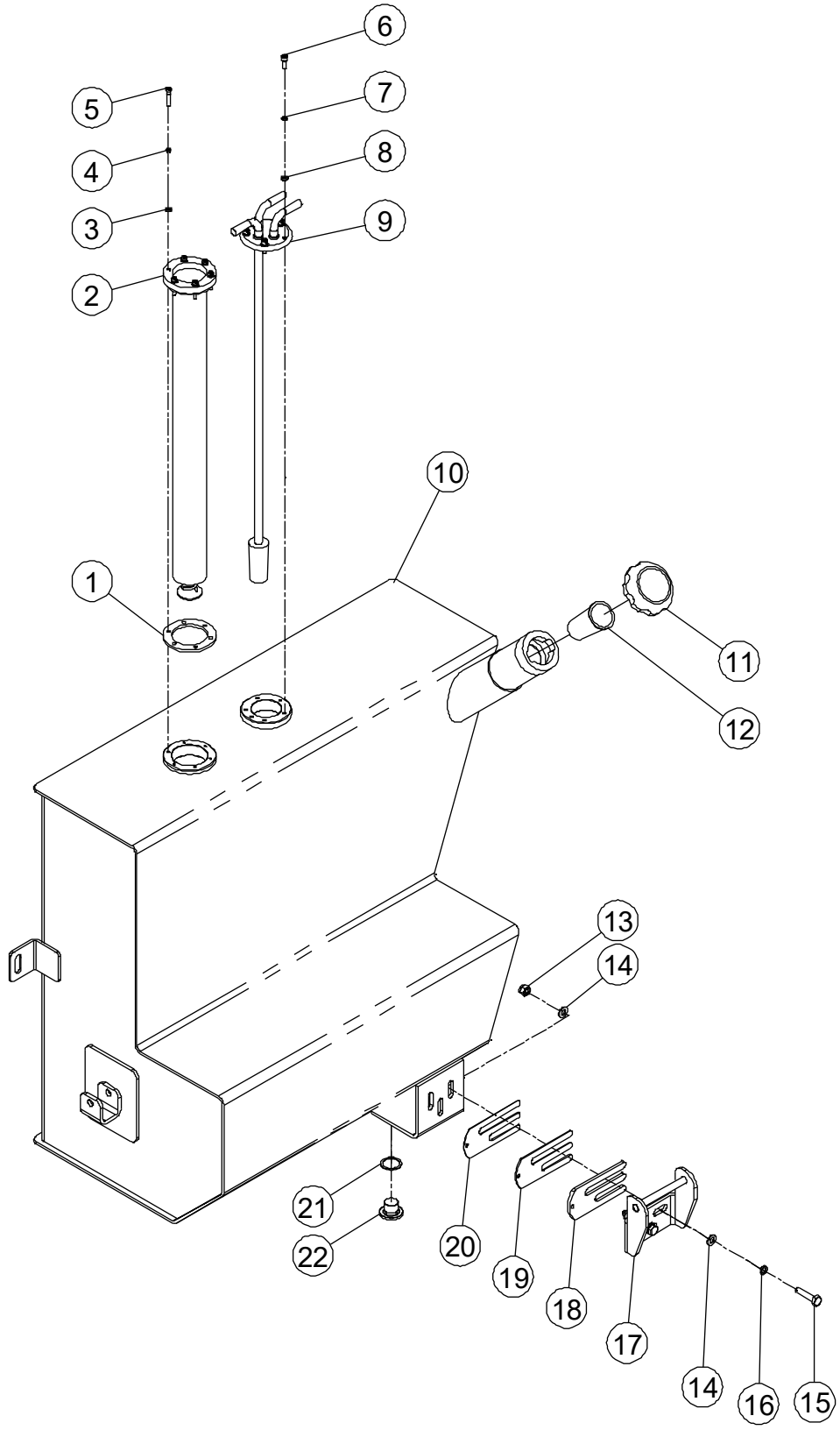

Figure 2-8 Fuel Tank Assembly

Item	Part Number	Description	Qty.	Remark
1	50002807	Pad, Rubber	1	
2	00002201	Fuel Level Sensor	1	
3	00000778	Flat Washer GB/T 97.1 4	6	
4	00000779	Spring Washer GB/T 93 4	6	
5	00002228	Screw GB/T 70 M4 × 25	6	
6	00001246	Screw GB/T 70 M5 × 16	5	
7	00000606	Spring Washer GB/T 93 5	5	
8	00000605	Flat Washer GB/T 97.1 5	5	
9	50002806	Vitta, Suction	1	
10	50002787	Fuel Tank Weldment	1	
11	00002153	Cover, Tank	1	
12	00002154	Strainer	1	
13	00000994	Nut GB/T 889.1 M8	3	
14	00000608	Flat Washer GB/T 97.1 8	6	
15	00002488	Bolt GB/T 5783 M8 × 35	3	
16	00000609	Spring Washer GB/T 93 8	3	
17	50002800	Seat, Lock	1	
18	50002805	Shim	1	
19	50002804	Shim	1	
20	50002803	Shim	1	
21	50000523	Washer	1	
22	50000197	G3/4 Plug, Magnetic	1	

Figure 2-9 Function Manifold Assembly with Fittings

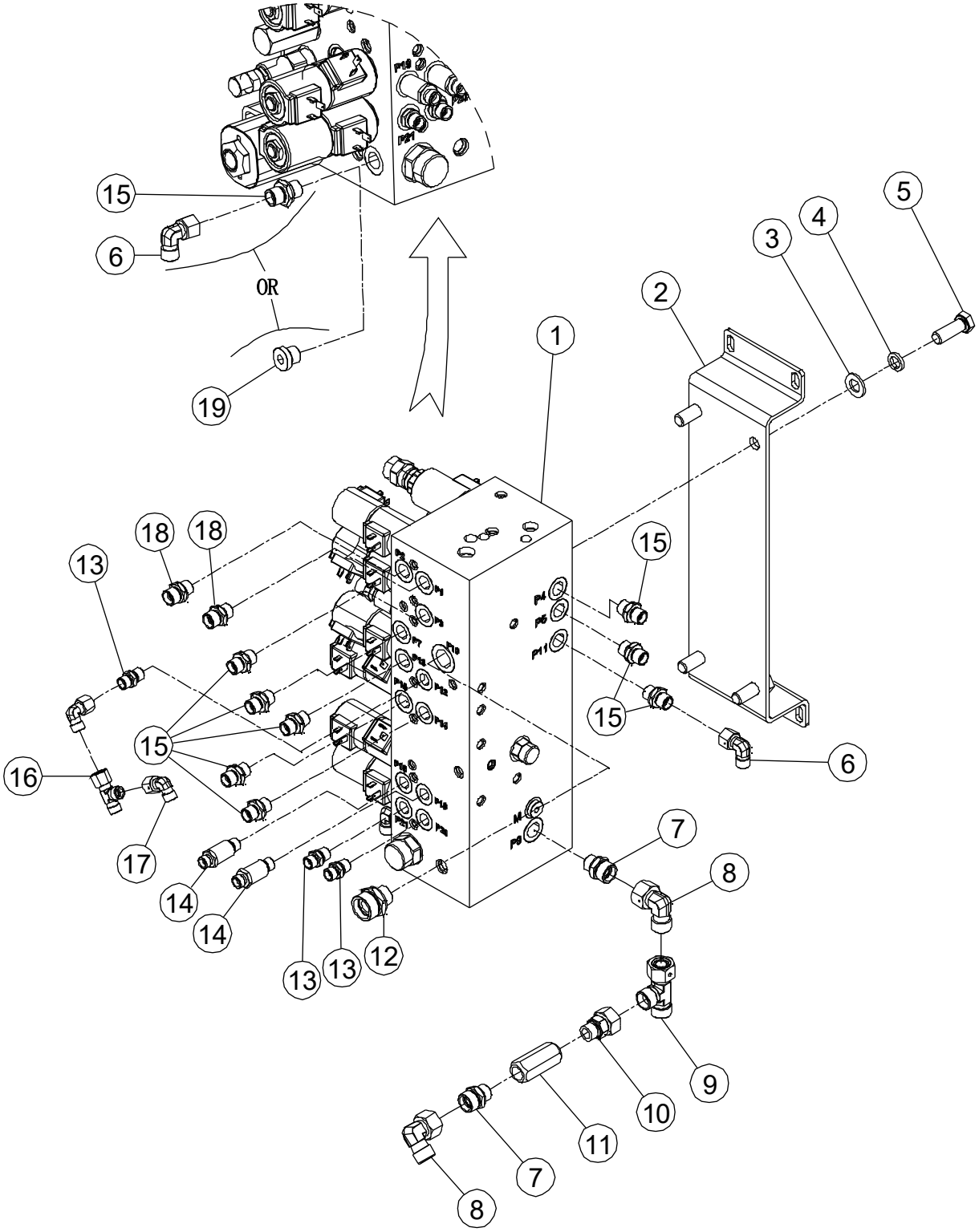

Figure 2-9 Function Manifold Assembly with Fittings

Item	Part Number	Description	Qty.	Remark
1	00003108	Function Manifold Assembly *(See Figure 2-10 for Breakdown)*	1	
2	50002809	Plate, Bracket	1	
3	00001043	Flat Washer GB/T 97.1 14	4	
4	00001258	Spring Washer GB/T 93 14	4	
5	00002904	Bolt GB/T 5783 M14 × 40	4	
6	00001833	Fitting, 90°	2	
7	00001264	Fitting, Straight	2	
8	00001835	Fitting, 90°	2	
9	00001240	Fitting, Tee	1	
10	00003583	Fitting, Straight	1	
11	00003864	Check Valve	1	
12	00001270	Fitting, Straight	1	
13	00001282	Fitting, Straight	3	
14	00003758	Fitting, Straight	2	
15	00001291	Fitting, Straight	9	
16	00001237	Fitting, Tee	1	
17	00001832	Fitting, 90°	2	
18	00001294	Fitting, Straight	2	
19	00001074	Plug VSTI16×1.5ED	1	without Hydraulic Generator

Figure 2-10 Function Manifold Assembly

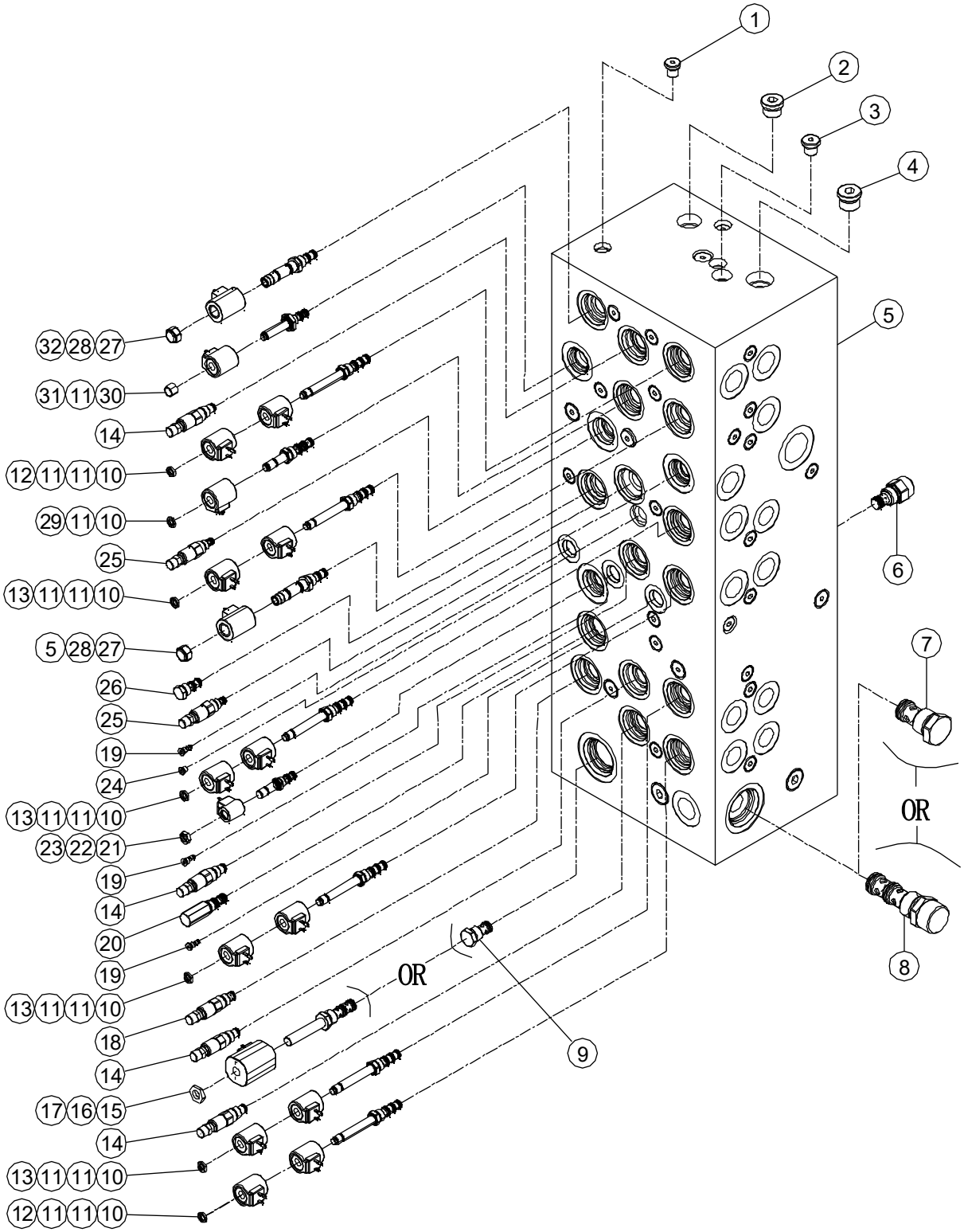

Figure 2-10 Function Manifold Assembly

Item	Part Number	Description	Qty.	Remark
1	00002999	Plug SAE2	42	
2	00004383	Plug SAE5	5	
3	00002997	Plug SAE3	12	
4	00003361	Plug SAE6	2	
5	00004368	Body	1	
6	00003999	Flow Control Valve FR08-20F-0-N-0.1	1	
7	00004367	Plug CV12-30-0-N	1	without Hydraulic Generator
8	00004369	Flow Control Valve	1	with Hydraulic Generator
9	00004366	Plug CV12-3A-0-N	1	without Hydraulic Generator
10	00003017	Nut	7	
11	00003287	Coil	14	
12	00003996	Cartridge without Coil	2	
13	00004243	Cartridge without Coil	4	
14	00004377	Cartridge, Relief Valve	4	
15	00004373	Nut	1	with Hydraulic Generato
16	00004376	Coil	1	with Hydraulic Generato
17	00004364	Cartridge without Coil	1	with Hydraulic Generato
18	00004379	Cartridge, Relief Valve	1	
19	00003013	Check Valve	3	
20	00004370	Logic Element	1	
21	00004372	Nut	1	
22	00004374	Coil	1	
23	00004361	Proportional Valve	1	
24	00002998	Plug SAE4	1	
25	00004378	Cartridge, Relief Valve	2	

Figure 2-10 Function Manifold Assembly (Continued)

Item	Part Number	Description	Qty.	Remark
26	00004363	Check Valve	1	
27	00003685	Nut	2	
28	00004002	Coil	2	
29	00003003	Cartridge without Coil	1	
30	00004371	Nut	1	
31	00004365	Cartridge without Coil	1	
32	00004362	Proportional Valve	2	

Figure 2-11 Synchronous Manifold with Fittings

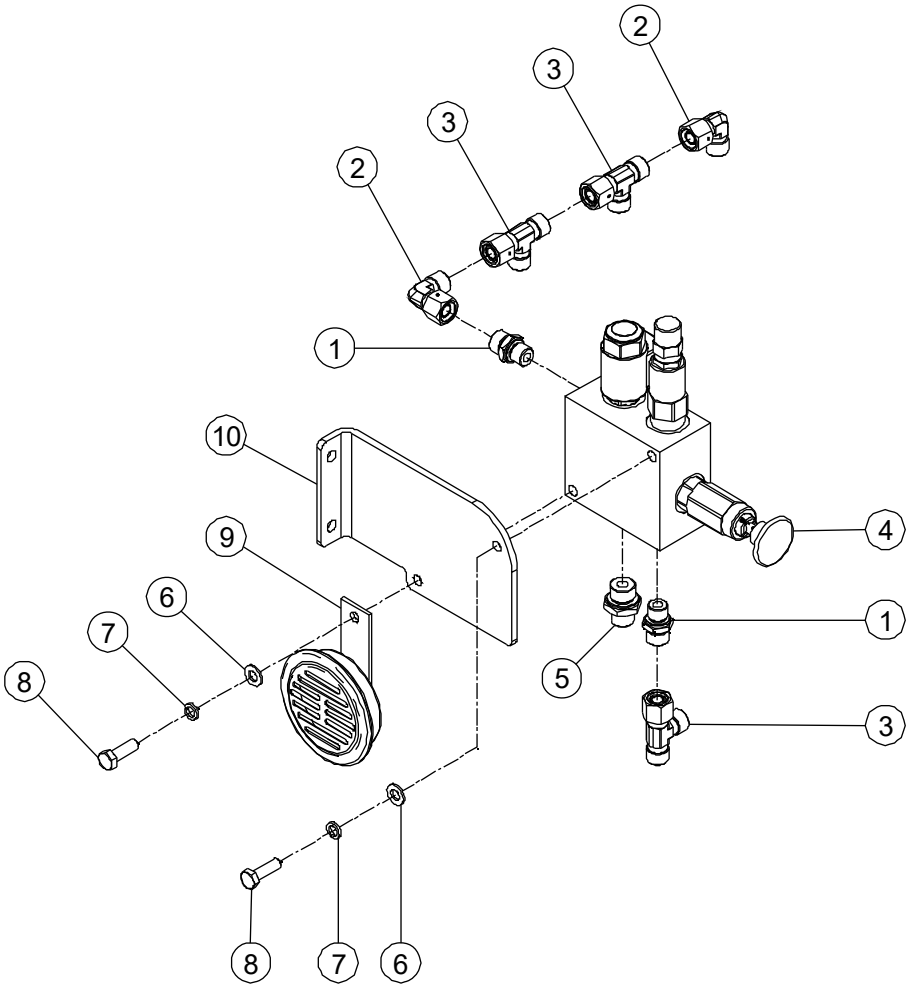

Figure 2-11 Synchronous Manifold with Fittings

Item	Part Number	Description	Qty.	Remark
1	00001290	Fitting, Straight	2	
2	00001833	Fitting, 90°	2	
3	00001238	Fitting, Tee	3	
4	00003109	Synchronous Valve *(See Figure 2-12 for Breakdown)*	1	
5	00001292	Fitting, Straight	1	
6	00000608	Flat Washer GB/T 97.1 8	2	
7	00000609	Spring Washer GB/T 93 8	2	
8	00000993	Bolt GB/T 5783 M8 × 25	2	
9	00002212	Horn	1	
10	50002813	Plate, Bracket	1	

Figure 2-12 Synchronous Manifold

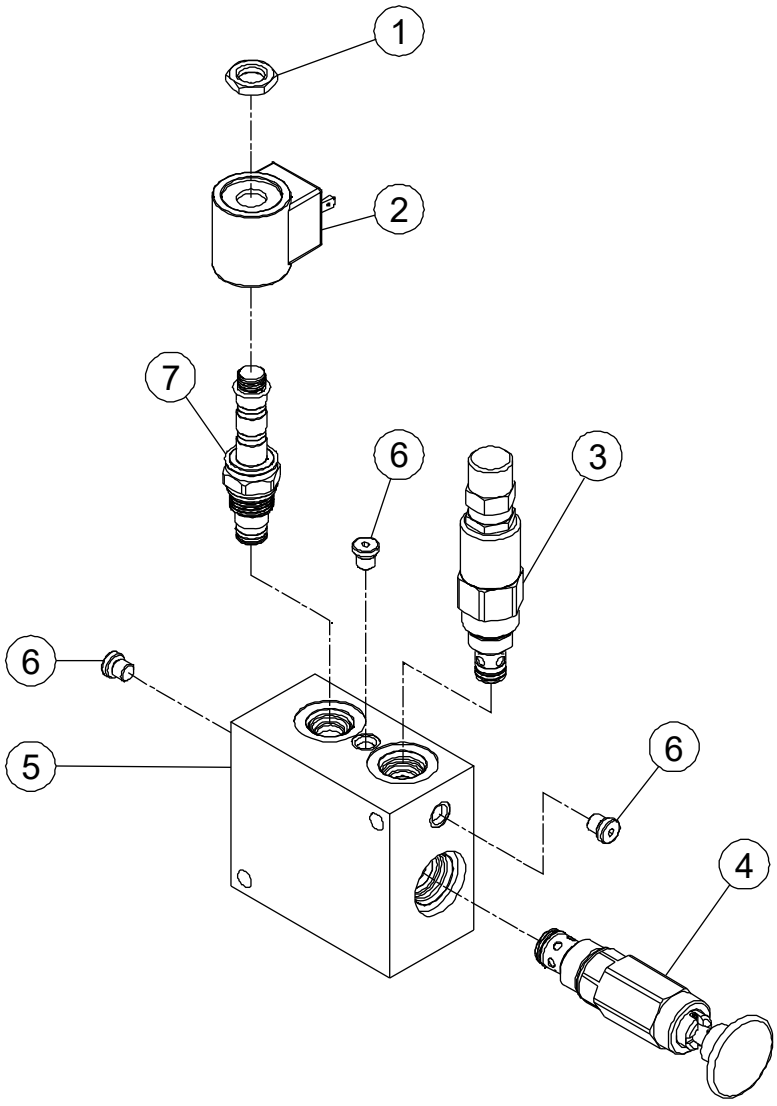

Figure 2-12 Synchronous Manifold

Item	Part Number	Description	Qty.	Remark
1	00003017	Nut	1	
2	00002043	Coil	1	
3	00003927	Cartridge, Relief Valve	1	
4	00003926	Manual Valve	1	
5	00003914	Body	1	
6	00002999	Plug SAE2	3	
7	00002395	Cartridge without Coil	1	

Figure 2-13 Radiator Assembly with Fittings

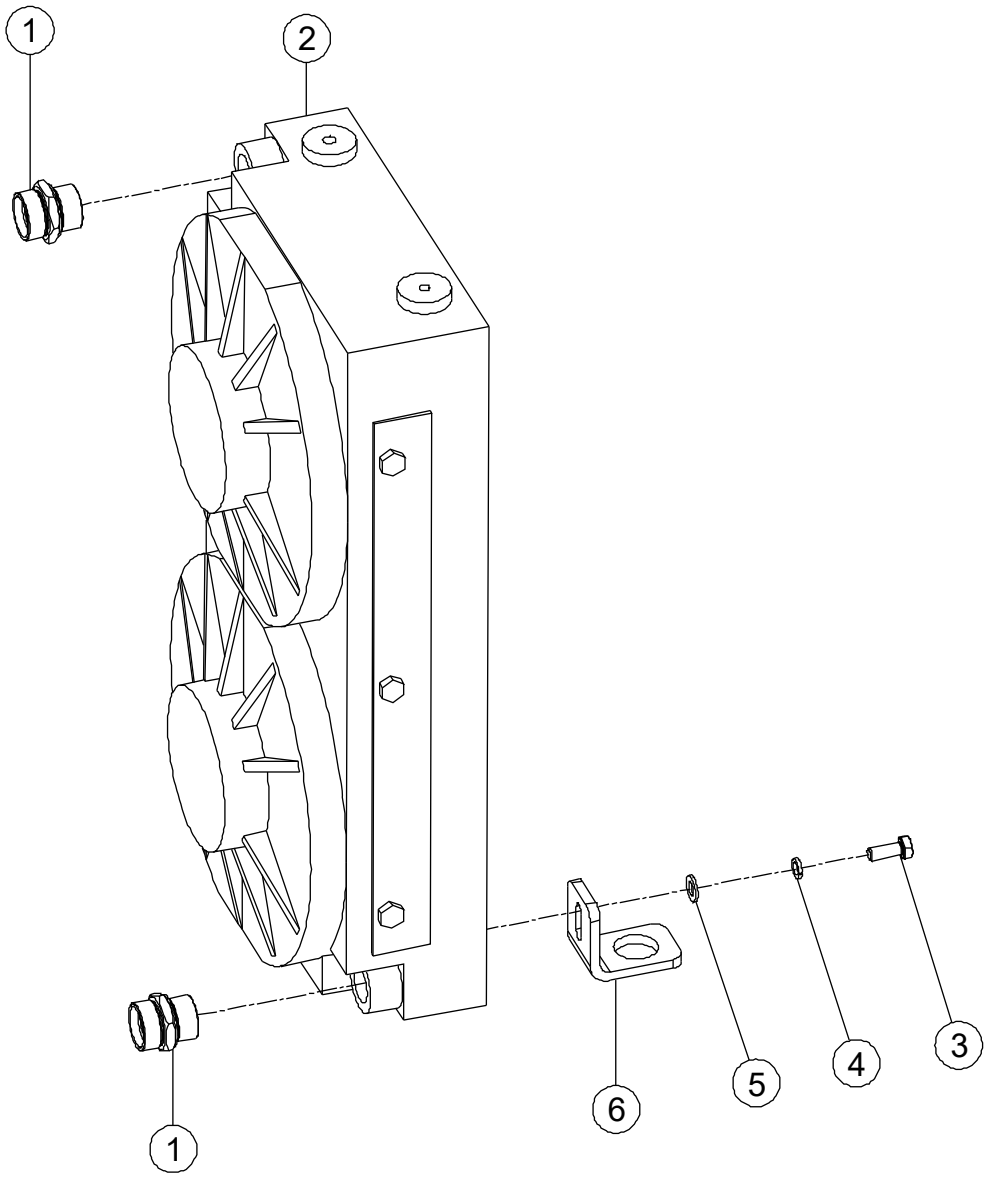

Figure 2-13 Radiator Assembly with Fittings

Item	Part Number	Description	Qty.	Remark
1	00002071	Fitting, Straight	2	
2	00001874	Radiator	1	
3	00000678	Bolt GB/T 5783 M10 × 25	2	
4	00000679	Spring Washer GB/T 93 10	2	
5	00000615	Flat Washer GB/T 97.1 10	2	
6	50002811	Plate, Bracket	2	

Figure 2-14 Ground Control Box Assembly

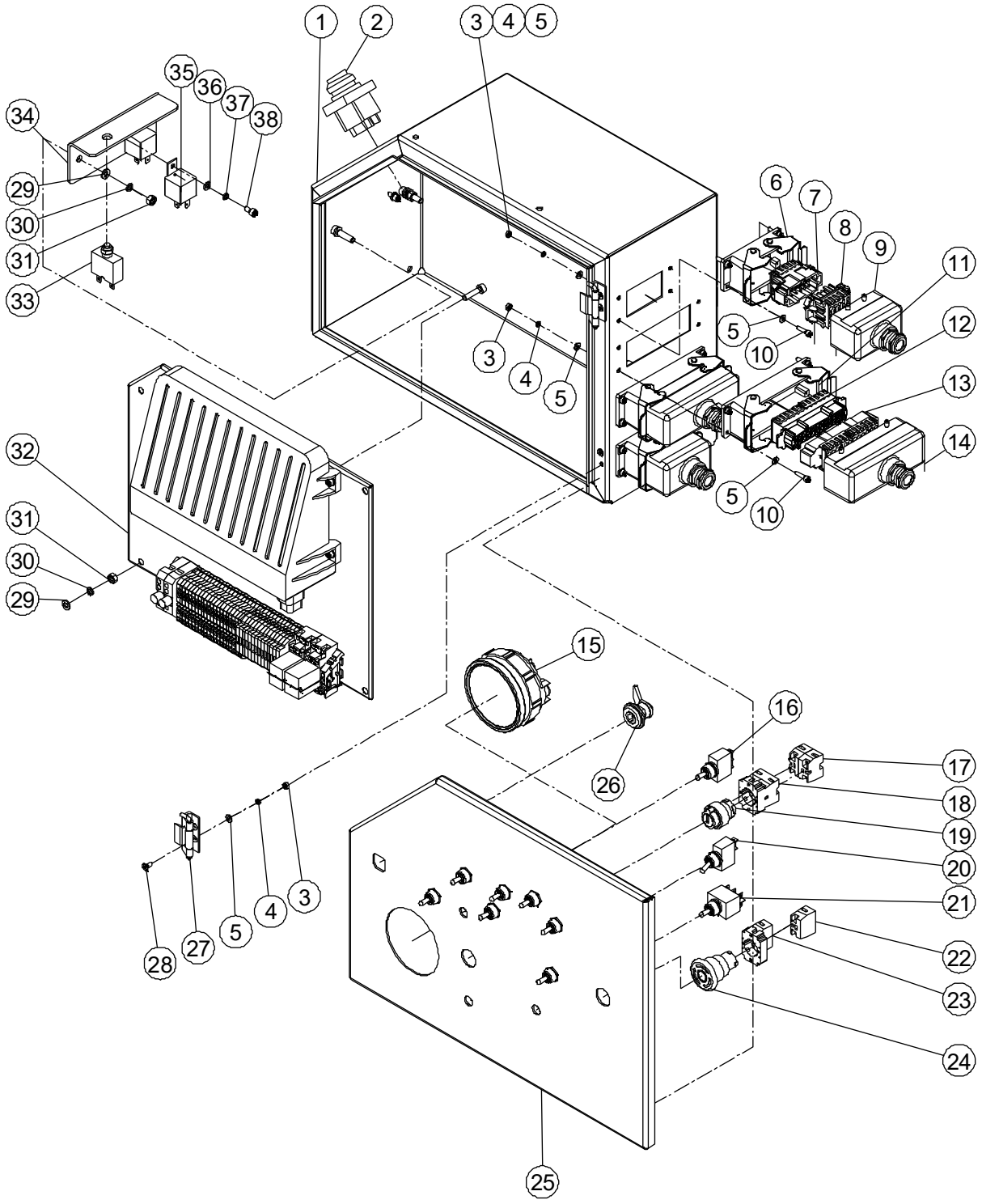

Figure 2-14 Ground Control Box Assembly

Item	Part Number	Description	Qty.	Remark
1	50002909	Box	1	
2	00002245	Alarm	1	
3	00002712	Nut GB/T 6170 M4	20	
4	00000779	Spring Washer GB/T 93 4	20	
5	00000778	Flat Washer GB/T 97.1 4	36	
6	00000731	Housing	2	
7	00000729	Male Insert	2	
8	00000727	Female Insert	2	
9	00000725	Hood	2	
10	00000604	Screw GB/T 70 M4×16	16	
11	00000732	Housing	2	
12	00000728	Female Insert	2	
13	00000730	Male Insert	2	
14	00000726	Hood	2	
15	00002210	D85 Display	1	
16	00000654	Switch, Toggle	3	
17	00002052	NO Contact	2	
18	00000755	Base with 1 NO Contact	1	
19	00000753	Keyswitch Head	1	
20	00001855	Switch, Toggle	1	
21	00000699	Switch, Toggle	6	
22	00001245	NC Contact	1	
23	00000752	Base with 1 NC Contact	1	
24	00000754	Red Mushroom Head	1	
25	50002907	Electric Control Box Cover	1	
26	00001296	Lock, Column	1	
27	50000217	Rack, Gemel	2	
28	00001254	Screw GB/T 819 M4 × 10 - Z	4	
29	00000620	Flat Washer GB/T 97.1 6	8	

Figure 2-14 Ground Control Box Assembly (Continued)

Item	Part Number	Description	Qty.	Remark
30	00000621	Spring Washer GB/T 93 6	6	
31	00002247	Nut GB/T 6170 M6	8	
32		Controller Assembly *(See Figure 2-15 for Breakdown)*	1	
33	00002208	Circuit Breaker	1	
34	50002903	Plate, Bracket	1	
35	00002206	Relay	2	
36	00000605	Flat Washer GB/T 97.1 5	2	
37	00000606	Spring Washer GB/T 93 5	2	
38	00001030	Screw GB/T 70 M5 × 10	2	

Figure 2-15 Controller Assembly

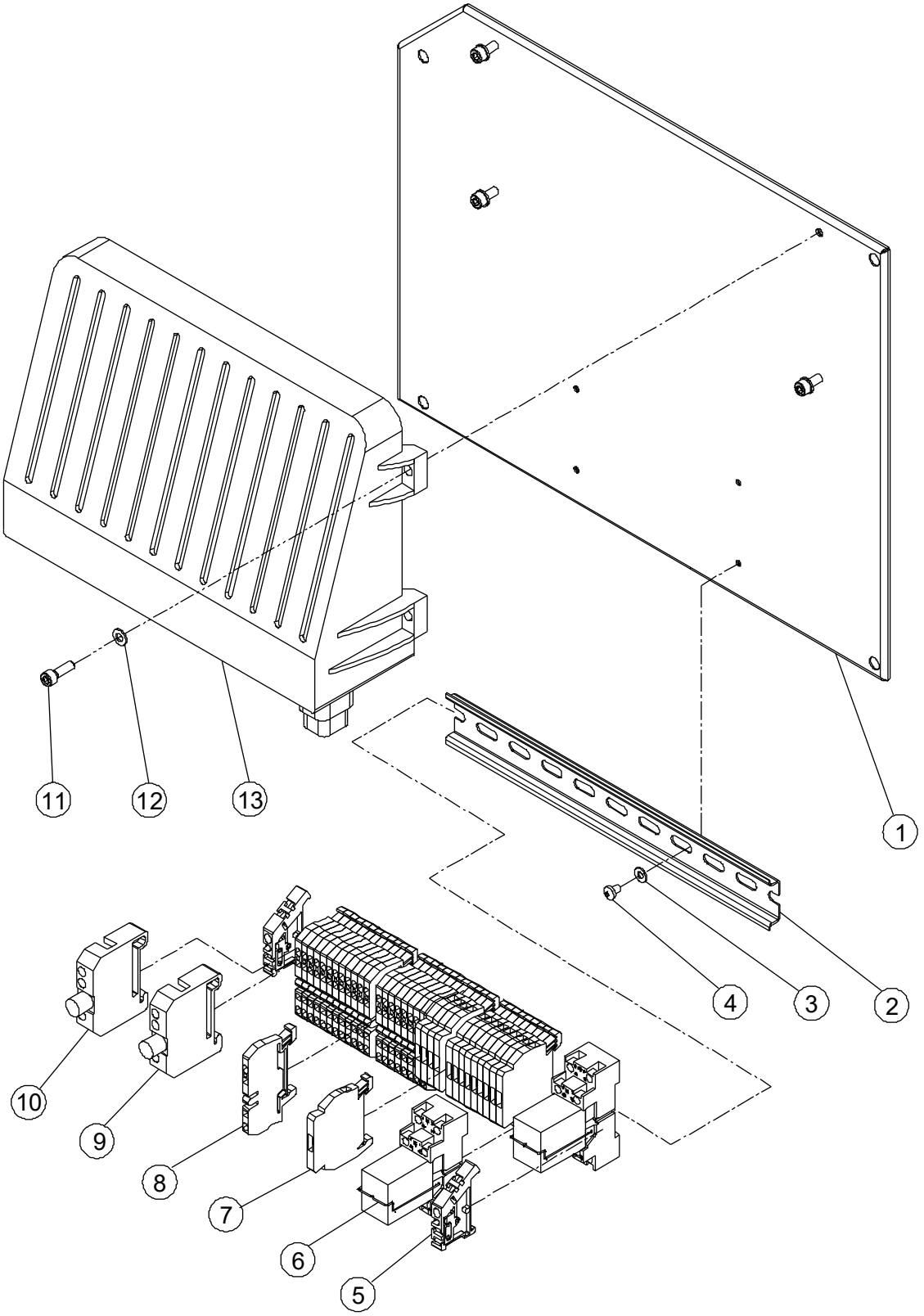

Figure 2-15 Controller Assembly

Item	Part Number	Description	Qty.	Remark
1	50002904	Plate, Bracket	1	
2	50000215	Bracket	1	
3	00000778	Flat Washer GB/T 97.1 4	2	
4	00002032	Screw GB/T 818 M4 × 6	2	
5	00000660	End, Fixation	2	
6	00000647	Relay	2	
7	00002235	Diode	14	
8	00000659	End, Straight	21	
9	00003142	Fuse terminals	1	
10	00000661	Fuse terminals	1	
11	00001246	Screw GB/T 70 M5 × 16	4	
12	00000605	Flat Washer GB/T 97.1 5	4	
13	00000639	Controller	1	

Figure 2-16 Counterweight and Engine Hoods Installations

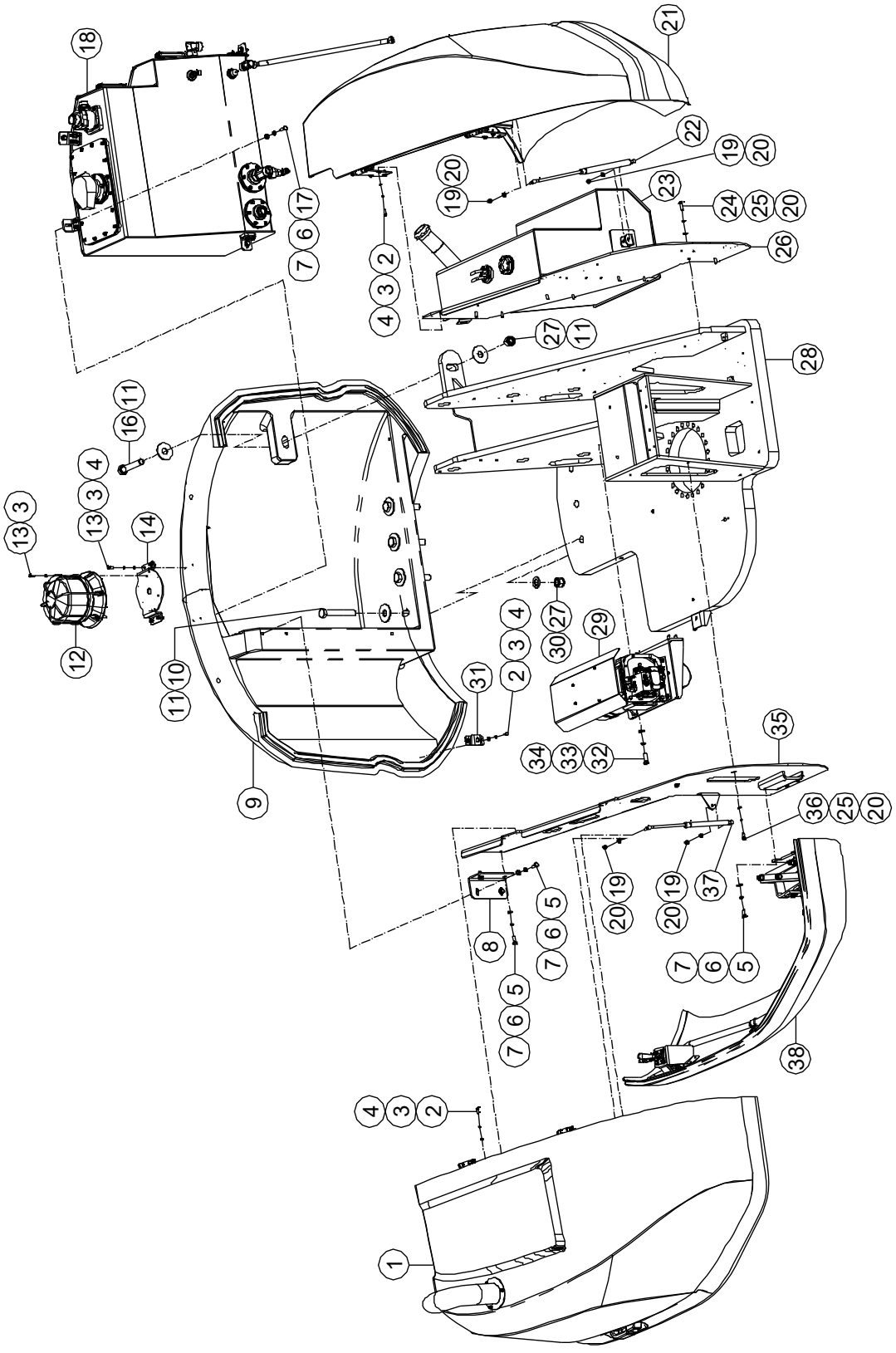

Figure 2-16 Counterweight and Engine Hoods Installations

Item	Part Number	Description	Qty.	Remark
1		Engine Upper Hood Assembly *(See Figure 2-19 for Breakdown)*	1	
2	00000743	Bolt GB/T 5783 M6 × 20	14	
3	00000621	Spring Washer GB/T 93 6	15	
4	00000620	Flat Washer GB/T 97.1 6	12	
5	00000678	Bolt GB/T 5783 M10 × 25	8	
6	00000679	Spring Washer GB/T 93 10	12	
7	00000615	Flat Washer GB/T 97.1 10	12	
8	50002966	Plate, Bracket	1	
9	50002968	Counterweight	1	
10	00002060	Bolt GB/T 5782 M24 × 150	4	
11	00001152	Flat Washer GB/T 96.1 24	6	
12	00004757	Flashing Beacon	1	
13	00000774	Screw GB/T 70 M6 × 20	7	
14	50002817	Bracket, Flashing Beacon	1	
16	00003121	Bolt GB/T 5782 M24 × 130	1	
17	00000683	Bolt GB/T 5783 M10 × 30	4	
18		Hydraulic Tank Assembly *(See Figure 2-17 for Breakdown)*	1	
19	00000994	Nut GB/T 889.1 M8	4	
20	00000608	Flat Washer GB/T 97.1 8	16	
21		Fuel Oil Tank Hood Assembly *(See Figure 2-20 for Breakdown)*	1	
22	50002972	Spring, Gas	1	
23		Fuel Tank Assembly *(See Figure 2-8 for Breakdown)*	1	
24	00000995	Bolt GB/T 5783 M8 × 30	8	
25	00000609	Spring Washer GB/T 93 8	12	
26	50003009	Plate, Bracket	1	
27	00001160	Nut GB/T 889.1 M24	5	
28	50003012	Turntable	1	

Figure 2-16 Counterweight and Engine Hoods Installations (Continued)

Item	Part Number	Description	Qty.	Remark
29		Hydraulic Generator Assembly *(See Figure 2-21 for Breakdown)*	1	
30	00001159	Flat Washer GB/T 97.1 24	4	
31	50002939	Plate, Stop	1	
32	00002046	Bolt GB/T 5783 M12 × 35	4	
33	00000815	Spring Washer GB/T 93 12	4	
34	00000814	Flat Washer GB/T 97.1 12	4	
35	50003026	Plate, Bracket	1	
36	00000875	Bolt GB/T 5783 M8 × 20	4	
37	50002971	Spring, Gas	1	
38		Engine Lower Hood Assembly *(See Figure 2-18 for Breakdown)*	1	

Figure 2-17 Hydraulic Tank Assembly

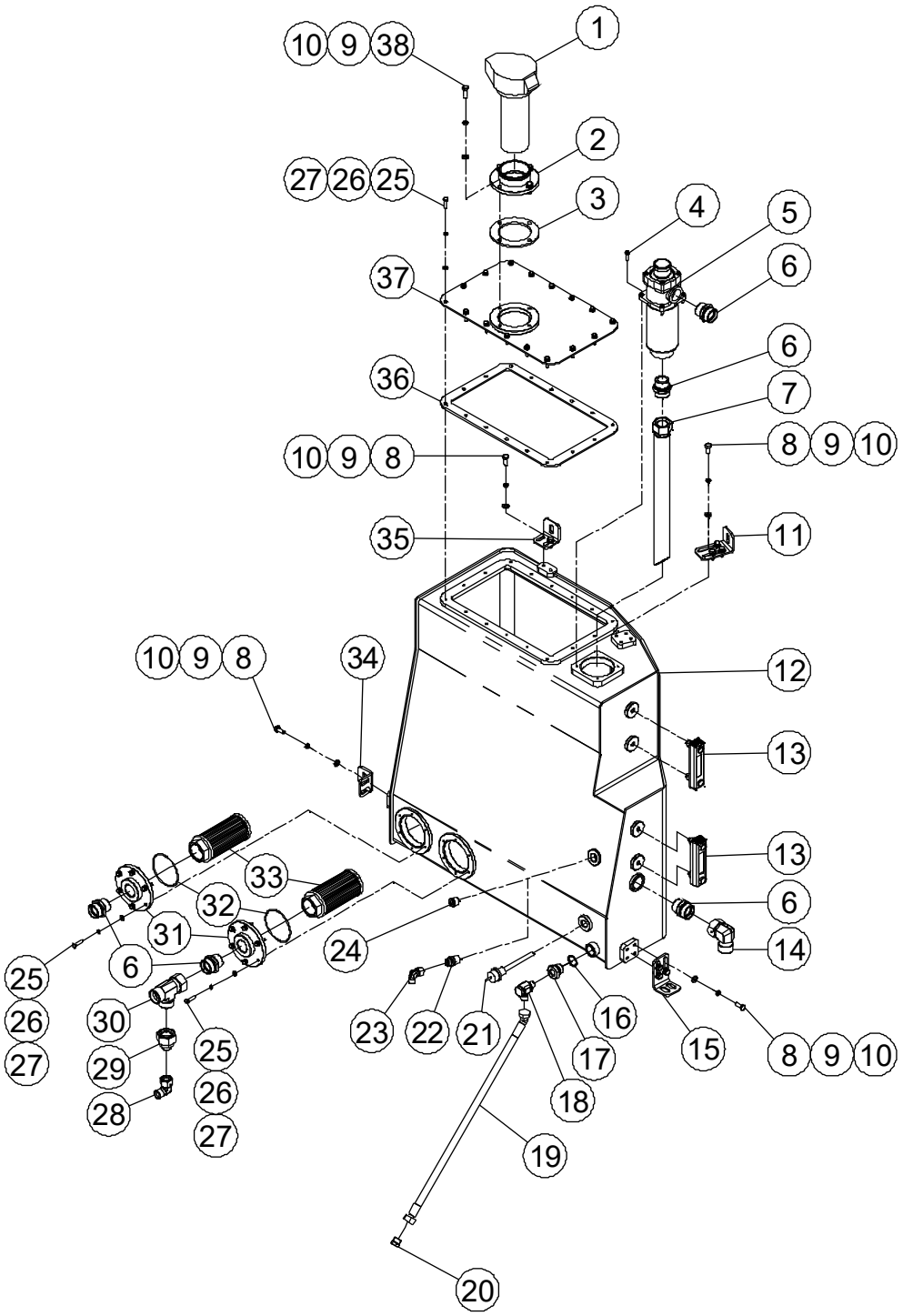

Figure 2-17 Hydraulic Tank Assembly

Item	Part Number	Description	Qty.	Remark
1	00003114	Breather/Fill Cap	1	
--	00004413	Cap	1	
--	00004414	Strainer	1	
--	00004415	Seal Kit for 00003114 Filter	1	
2	50002989	Plate	1	
3	50003031	Gasket	1	
4	00000817	Screw GB/T 70 M5 × 20	4	
5	00003113	Filter, Return Oil	1	
--	00004416	Strainer	1	
--	00004417	Seal Kit for 00003113 Filter	1	
6	00002071	Fitting, Straight	5	
7	50003300	Hose, Return Oi	1	
8	00000875	Bolt GB/T 5783 M8 × 20	12	
9	00000609	Spring Washer GB/T 93 8	16	
10	00000608	Flat Washer GB/T 97.1 8	16	
11	50003006	Plate, Bracket	2	
12	50002995	Hydraulic Tank Weldment	1	
13	00001873	Gauge, Sight	2	
14	00001837	Fitting, 90°	1	
15	50004913	Plate, Bracket	1	
16	50000523	Washer	1	
17	00003195	Fitting, Straight G3/4-M16×1.5	1	
18	00003202	Fitting, 90°	1	
19	00003197	Hose Assembly	1	
20	00003242	Plug M18×1.5	1	
21	00000645	Sensor, Temperature	1	
22	00003840	Fitting, Straight	1	
23	00001833	Fitting, 90°	1	

Figure 2-17 Hydraulic Tank Assembly (Continued)

Item	Part Number	Description	Qty.	Remark
24	00003227	Plug Z1/2"×14	1	without Hydraulic Generato
25	00000619	Bolt GB/T 5783 M6 × 25	28	
26	00000621	Spring Washer GB/T 93 6	28	
27	00000620	Flat Washer GB/T 97.1 6	28	
28	00001835	Fitting, 90°	1	
29	00003844	Fitting, Straight	1	
30	00001242	Fitting, Tee	1	
31	50001437	Flange	2	
32	00001536	O-Ring As568A 82.22×2.62	2	
33	00000519	Strainer, Suction	2	
34	50004912	Plate, Bracket	1	
35	50003005	Plate, Bracket	2	
36	50002992	Gasket	1	
37	50002993	Cover	1	
38	00000993	Bolt GB/T 5783 M8 × 25	4	

Figure 2-18 Engine Lower Hood Assembly

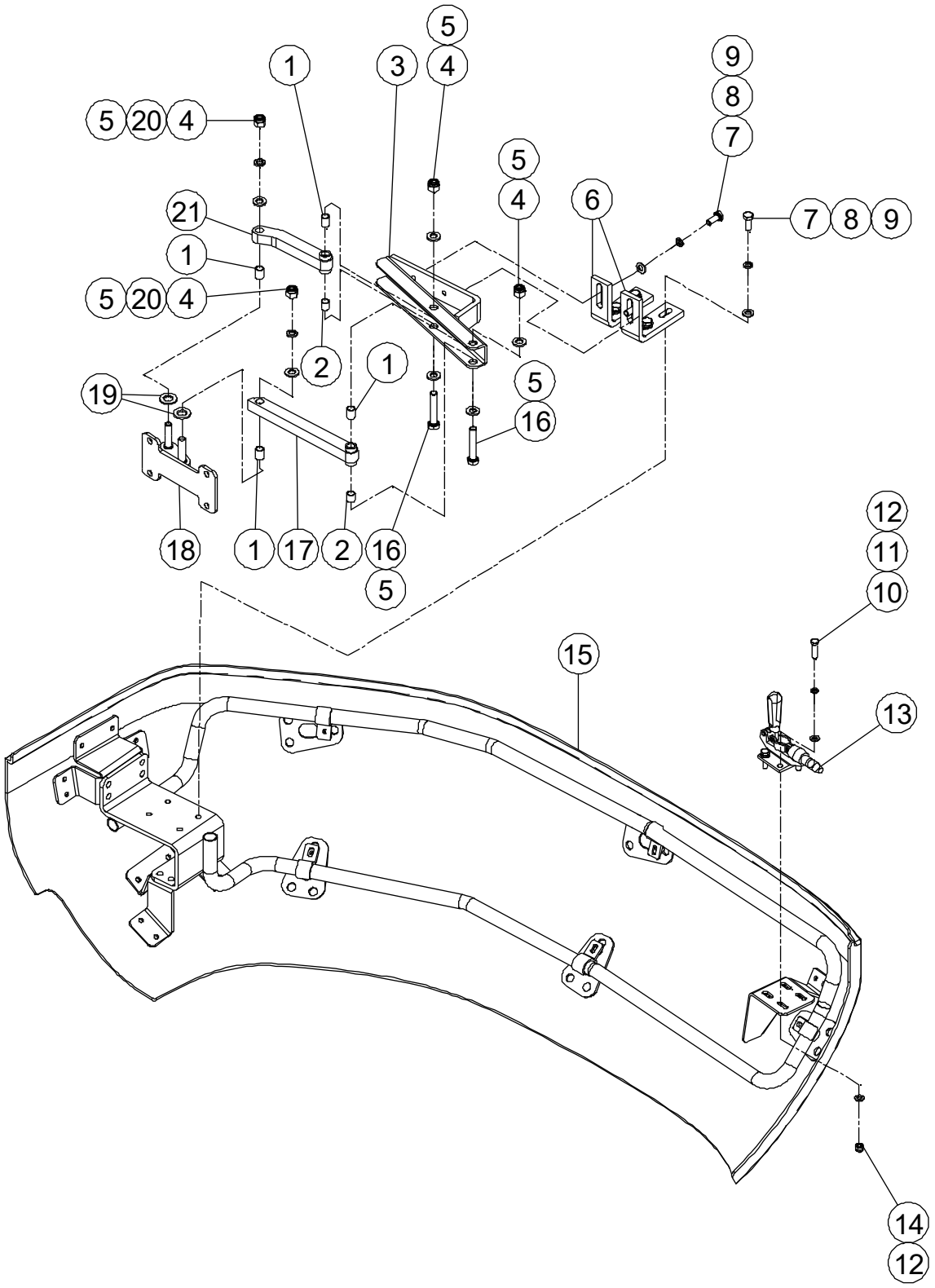

Figure 2-18 Engine Lower Hood Assembly

Item	Part Number	Description	Qty.	Remark
1	00000347	8812-121419Bushing	4	
2	00000346	8812-121415Bushing	2	
3	50002925	Seat	1	
4	00001056	Nut GB/T 889.1 M12	4	
5	00000814	Flat Washer GB/T 97.1 12	6	
6	50002937	Plate, Bracket	2	
7	00000678	Bolt GB/T 5783 M10 × 25	6	
8	00000679	Spring Washer GB/T 93 10	6	
9	00000615	Flat Washer GB/T 97.1 10	6	
10	00000995	Bolt GB/T 5783 M8 × 30	4	
11	00000609	Spring Washer GB/T 93 8	4	
12	00000608	Flat Washer GB/T 97.1 8	8	
13	50002938	Clamp, Toggle	1	
14	00000994	Nut GB/T 889.1 M8	4	
15	50002923	Engine Lower Hood	1	
16	00002516	Bolt GB/T 5783 M12 × 65	2	
17	50002928	Linker	1	
18	50002933	Gemel Seat	1	
19	00000997	Flat Washer GB/T 97.1 16	2	
20	00000815	Spring Washer GB/T 93 12	2	
21	50002931	Linker	1	

Figure 2-19 Engine Upper Hood Assembly

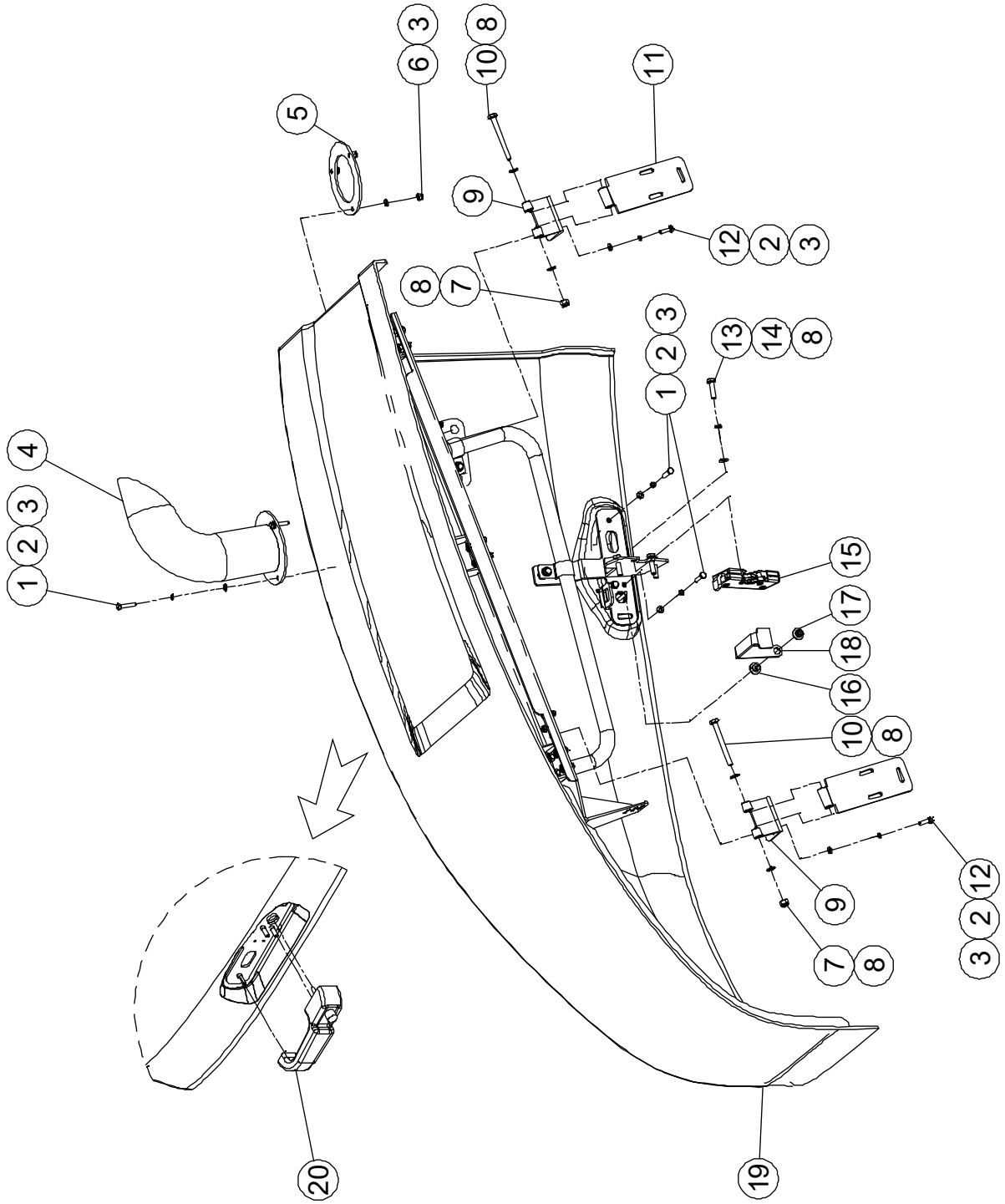

Figure 2-19 Engine Upper Hood Assembly

Item	Part Number	Description	Qty.	Remark
1	00000775	Bolt GB/T 5783 M6 × 30	6	
2	00000621	Spring Washer GB/T 93 6	12	
3	00000620	Flat Washer GB/T 97.1 6	15	
4	50001512	Exhaust Tube Weldment	1	
5	50001514	Bracket	1	
6	00000742	Nut GB/T 889.1 M6	3	
7	00000994	Nut GB/T 889.1 M8	2	
8	00000608	Flat Washer GB/T 97.1 8	8	
9	50002916	Hinge	2	
10	00001026	Bolt GB/T 5782 M8 × 80	2	
11	50002919	Hinge	2	
12	00000743	Bolt GB/T 5783 M6 × 20	6	
13	00000995	Bolt GB/T 5783 M8 × 30	4	
14	00000609	Spring Washer GB/T 93 8	4	
15	10000480	Lock	1	
16	50000478	Pin	1	
17	50000479	Nut	1	
18	50002914	Bracket	1	
19	50002913	Engine Upper Hood	1	
20	50000524	Doorknob	1	

Figure 2-20 Fuel Oil Tank Hood Assembly

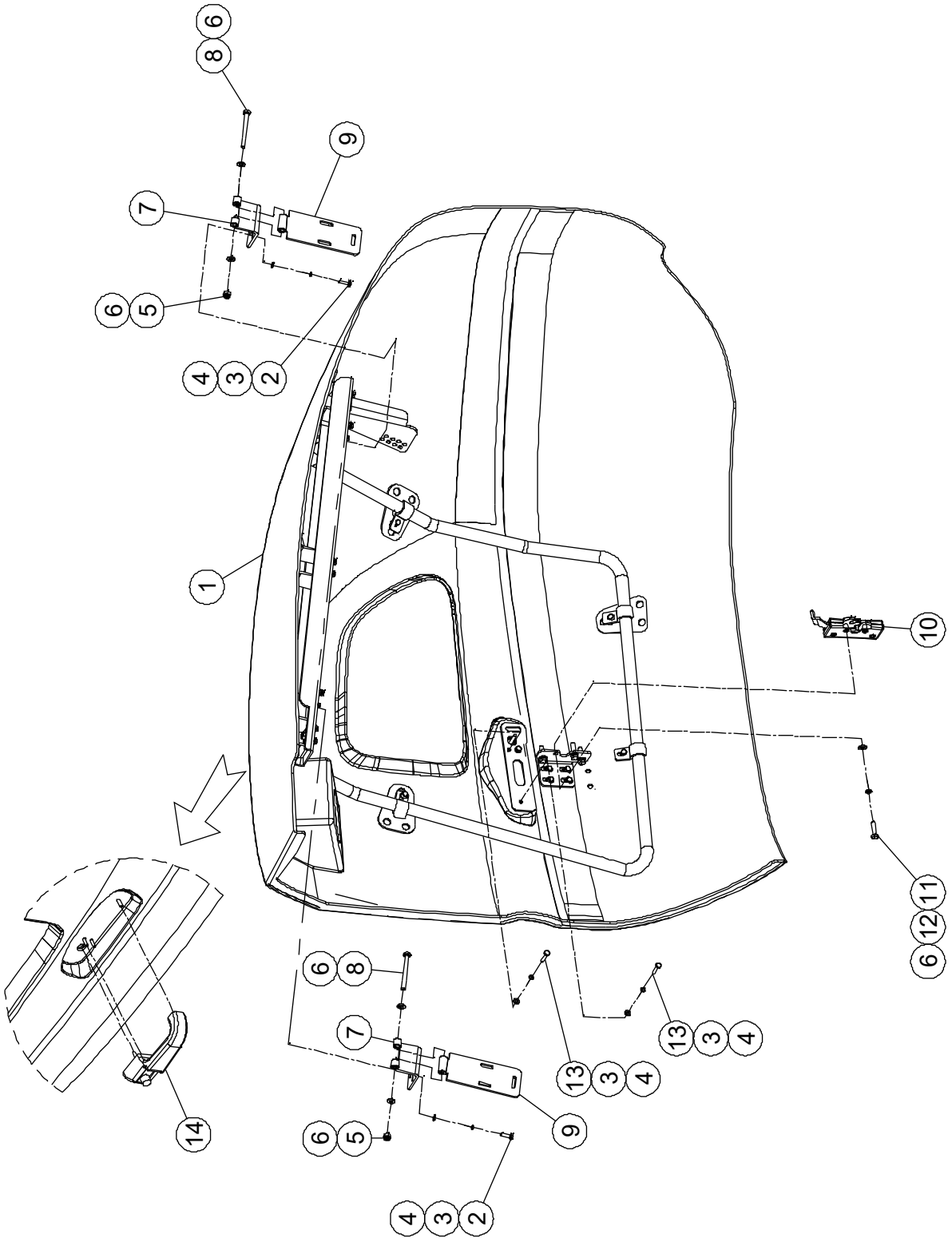

Figure 2-20 Fuel Oil Tank Hood Assembly

Item	Part Number	Description	Qty.	Remark
1	50003008	Fuel Oil Tank Hood	1	
2	00000743	Bolt GB/T 5783 M6 × 20	6	
3	00000621	Spring Washer GB/T 93 6	9	
4	00000620	Flat Washer GB/T 97.1 6	9	
5	00000994	Nut GB/T 889.1 M8	2	
6	00000608	Flat Washer GB/T 97.1 8	8	
7	50002916	Hinge	2	
8	00001026	Bolt GB/T 5782 M8 × 80	2	
9	50002919	Hinge	2	
10	10000481	Lock	1	
11	00000995	Bolt GB/T 5783 M8 × 30	4	
12	00000609	Spring Washer GB/T 93 8	4	
13	00000775	Bolt GB/T 5783 M6 × 30	3	
14	50000524	Doorknob	1	

Figure 2-21 Hydraulic Generator Assembly

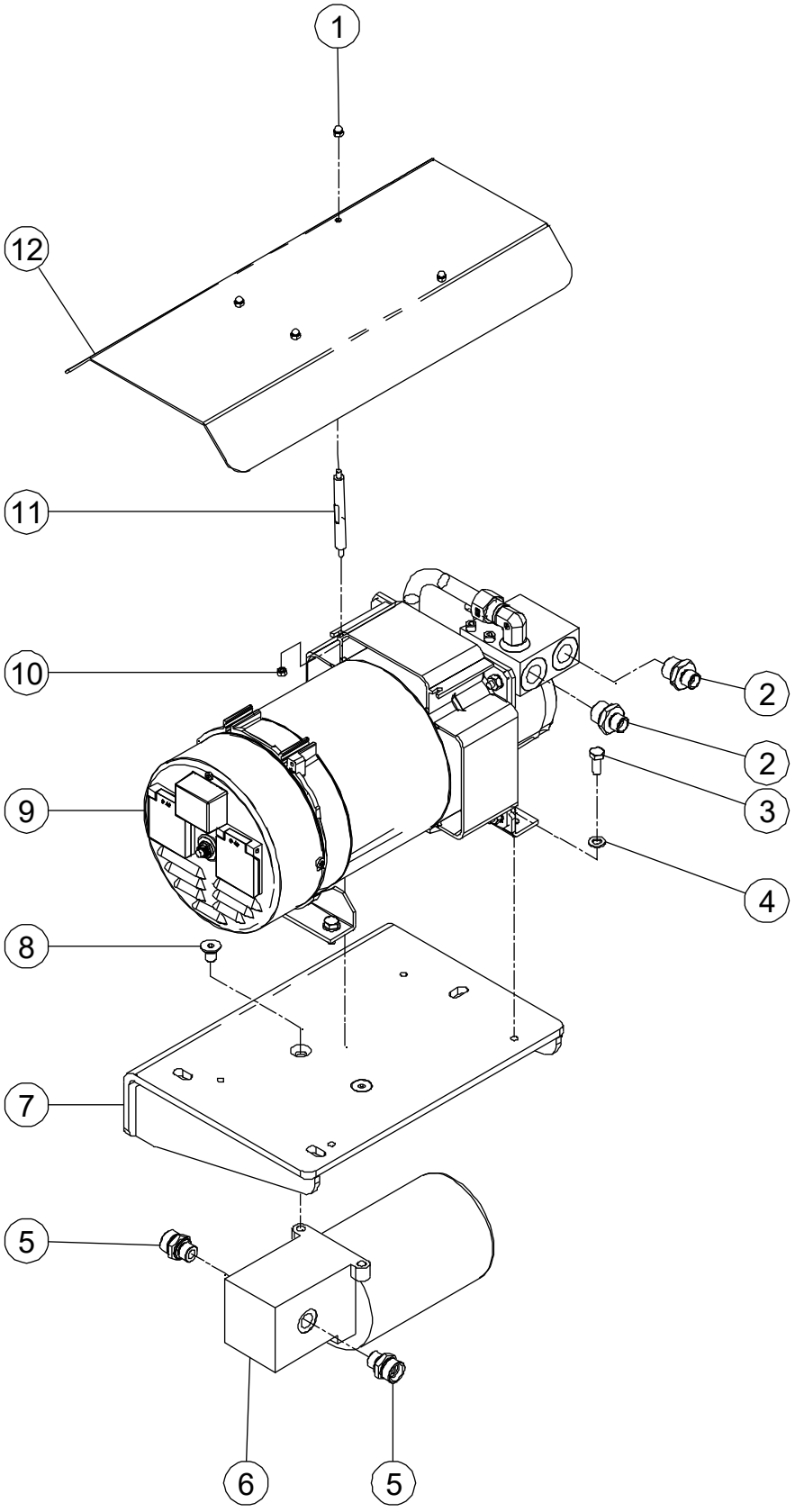

Figure 2-21 Hydraulic Generator Assembly

Item	Part Number	Description	Qty.	Remark
1	00003138	Nut GB/T 923 M5	4	Option
2	00001500	Fitting, Straight	2	Option
3	00000875	Bolt GB/T 5783 M8 × 20	4	Option
4	00000608	Flat Washer GB/T 97.1 8	4	Option
5	00001507	Fitting, Straight	2	
6	90005017	Emergency Pump Assembly	1	Either-Or
	00006580		1	
7	50002823	Plate, Bracket	1	
8	00000844	Screw GB/T 70.3 M10×16	2	
9	00003130	Hydraulic Generator (5KW,230V,50Hz)	1	Option
10	00000688	Nut GB/T 6170 M5	4	Option
11	50002822	Knighthead	4	Option
12	50002821	Shield	1	Option

Boom

Section 3

Figure 3-1 Boom and Turntable Installations

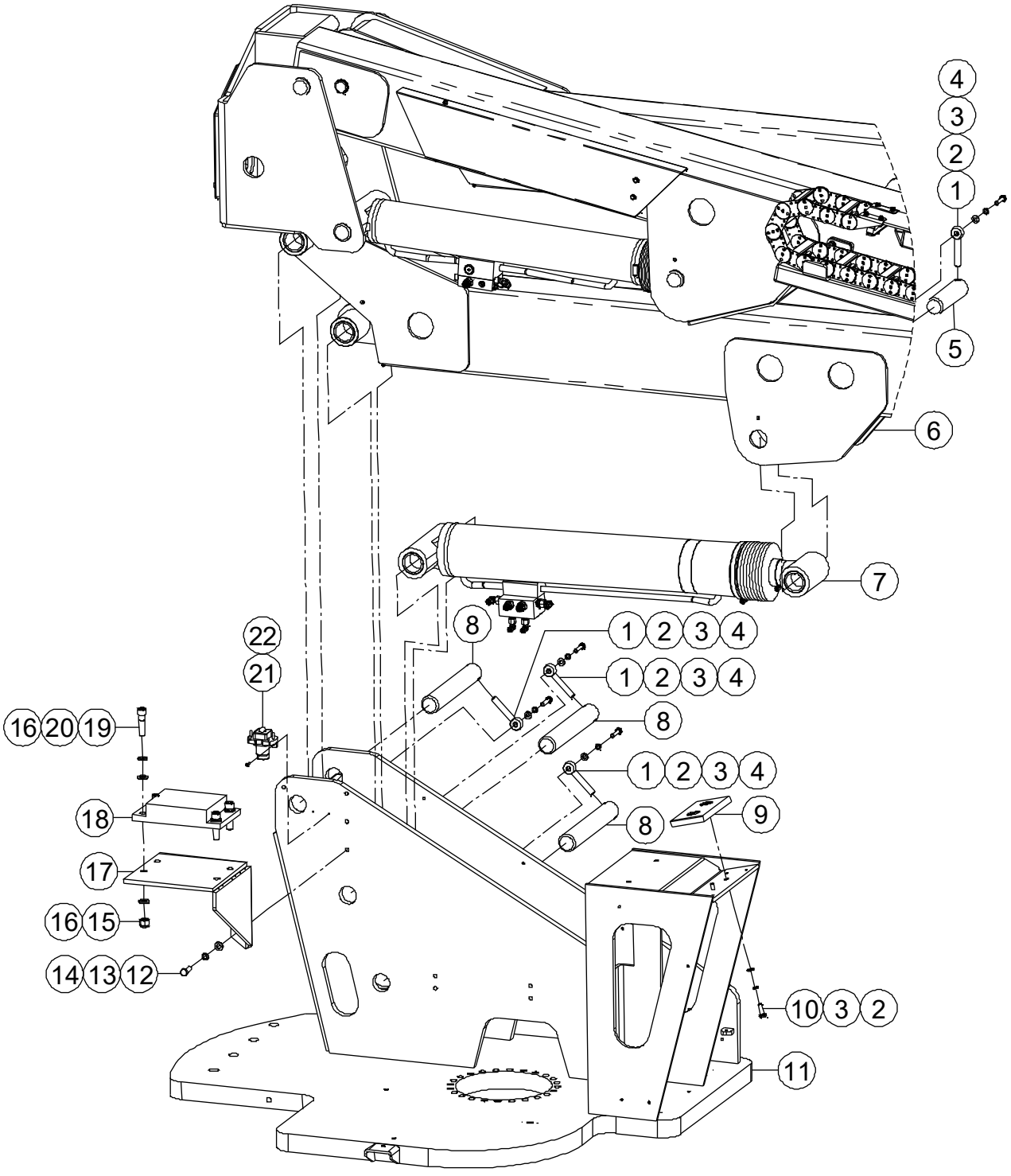

Figure 3-1 Boom and Turntable Installations

Item	Part Number	Description	Qty.	Remark
1	00003089	8902-16095B Pin, Lock	4	
2	00000615	Flat Washer GB/T 97.1 10	6	
3	00000679	Spring Washer GB/T 93 10	6	
4	00002411	Bolt GB/T 5783 M10 × 45	4	
5	00000126	895-50181 Pin, Pivot	1	
6		Boom Assembly *(See Figure 3-2 for Breakdown)*	1	
7		Lower Lifting Cylinder Assembly *(See Figure 5-1 for Breakdown)*	1	
8	00000132	895-50316 Pin, Pivot	3	
9	50002964	Pad, Wear	1	
10	00000683	Bolt GB/T 5783 M10 × 30	2	
11	50003012	Turntable	1	
12	00002046	Bolt GB/T 5783 M12 × 35	4	
13	00000815	Spring Washer GB/T 93 12	4	
14	00000814	Flat Washer GB/T 97.1 12	4	
15	00001058	Nut GB/T 889.1 M16	4	
16	00000997	Flat Washer GB/T 97.1 16	8	
17	50002970	Plate, Bracket	1	
18	50000102	Boom Pad	1	
19	00002492	Screw GB/T 70 M16 × 60	4	
20	00001035	Spring Washer GB/T 93 16	4	
21	00002205	Contactor	1	
22	00001171	Screw GB/T 70.2 M5×14	2	

Figure 3-2 Boom Assembly

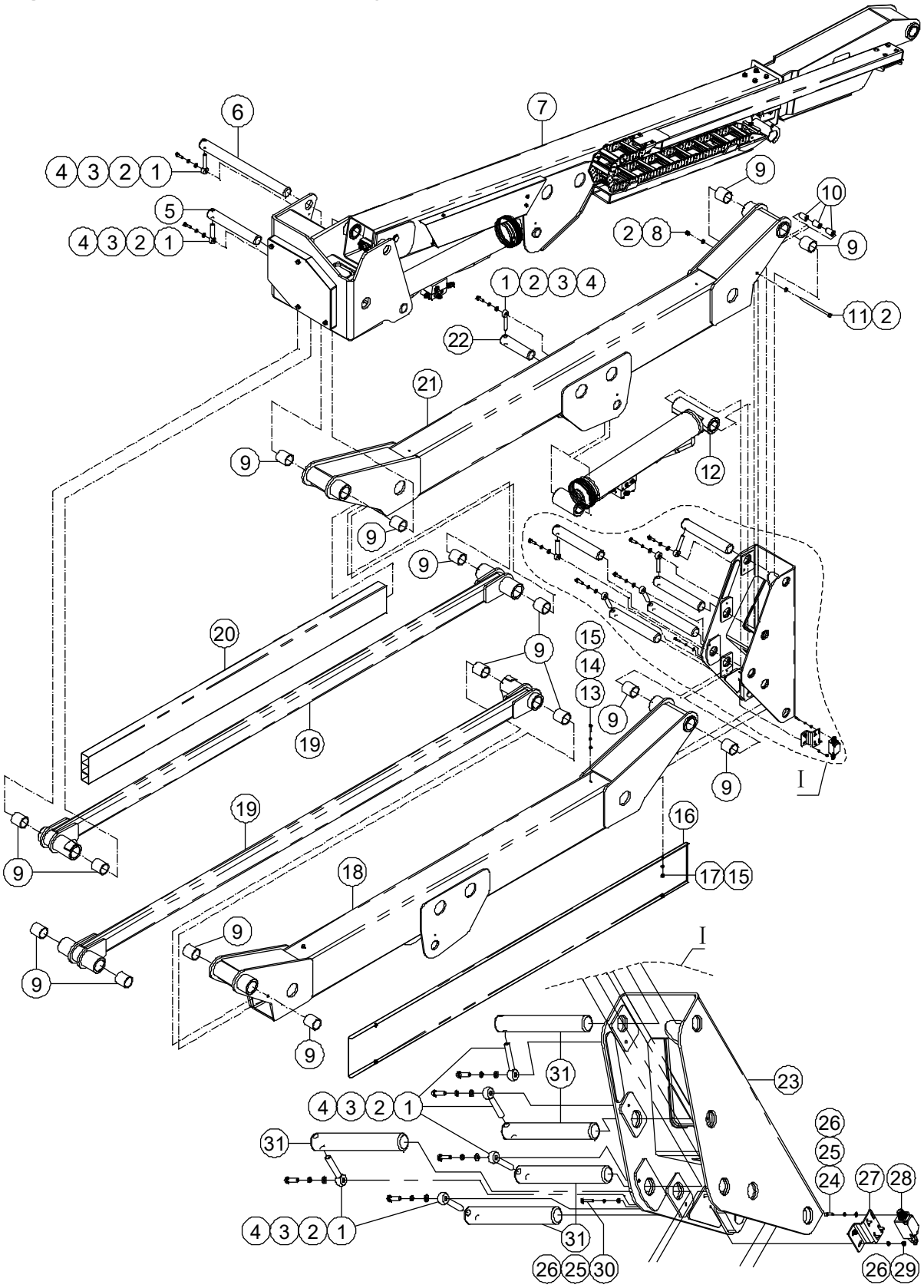

Figure 3-2 Boom Assembly

Item	Part Number	Description	Qty.	Remark
1	00003089	8902-16095B Pin, Lock	8	
2	00000615	Flat Washer GB/T 97.1 10	10	
3	00000679	Spring Washer GB/T 93 10	8	
4	00000684	Bolt GB/T 5783 M10 × 35	8	
5	00000132	895-50316 Pin, Pivot	1	
6	00000142	895-50576 Pin, Pivot	1	
7		Telescopic Boom Assembly *(See Figure 3-3 for Breakdown)*	1	
8	00000682	Nut GB/T 889.1 M10	1	
9	00000428	8813-506060 Sleeve Bearing	16	
10	50000709	Wheel, Nylon	3	
11	00002033	Bolt GB/T 5782 M10 × 200	1	
12		Mid Lifting Cylinder Assembly *(See Figure 5-2 for Breakdown)*	1	
13	00000995	Bolt GB/T 5783 M8 × 30	4	
14	00000609	Spring Washer GB/T 93 8	4	
15	00000608	Flat Washer GB/T 97.1 8	8	
16	50003095	Board, Vitta	1	GTBZ16A
	50003586	Board, Vitta	1	GTBZ18A
17	00000994	Nut GB/T 889.1 M8	4	
18	50003045	Crank Arm 1	1	GTBZ16A
	50003582	Crank Arm 1	1	GTBZ18A
19	50003040	Rod, Connection	2	GTBZ16A
	50003584	Rod, Connection	2	GTBZ18A
20	50003096	Sleeve, Vitta	1	GTBZ16A
	50003247	Sleeve, Vitta	1	GTBZ18A
21	50003051	Crank Arm 2	1	GTBZ16A
	50003587	Crank Arm 2	1	GTBZ18A
22	00000126	895-50181 Pin, Pivot	1	
23	50003042	Cage, Connection	1	

Figure 3-2 Boom Assembly (Continued)

Item	Part Number	Description	Qty.	Remark
24	00000774	Screw GB/T 70 M6 × 20	4	
25	00000621	Spring Washer GB/T 93 6	6	
26	00000620	Flat Washer GB/T 97.1 6	8	
27	50000294	Plate, Bracket	1	
28	00000750	Switch, Limit	1	
29	00000742	Nut GB/T 889.1 M6	2	
30	00002895	Bolt GB/T 5783 M6 × 35	2	
31	00000131	895-50301 Pin, Pivot	5	

Figure 3-3 Telescopic Boom Installation

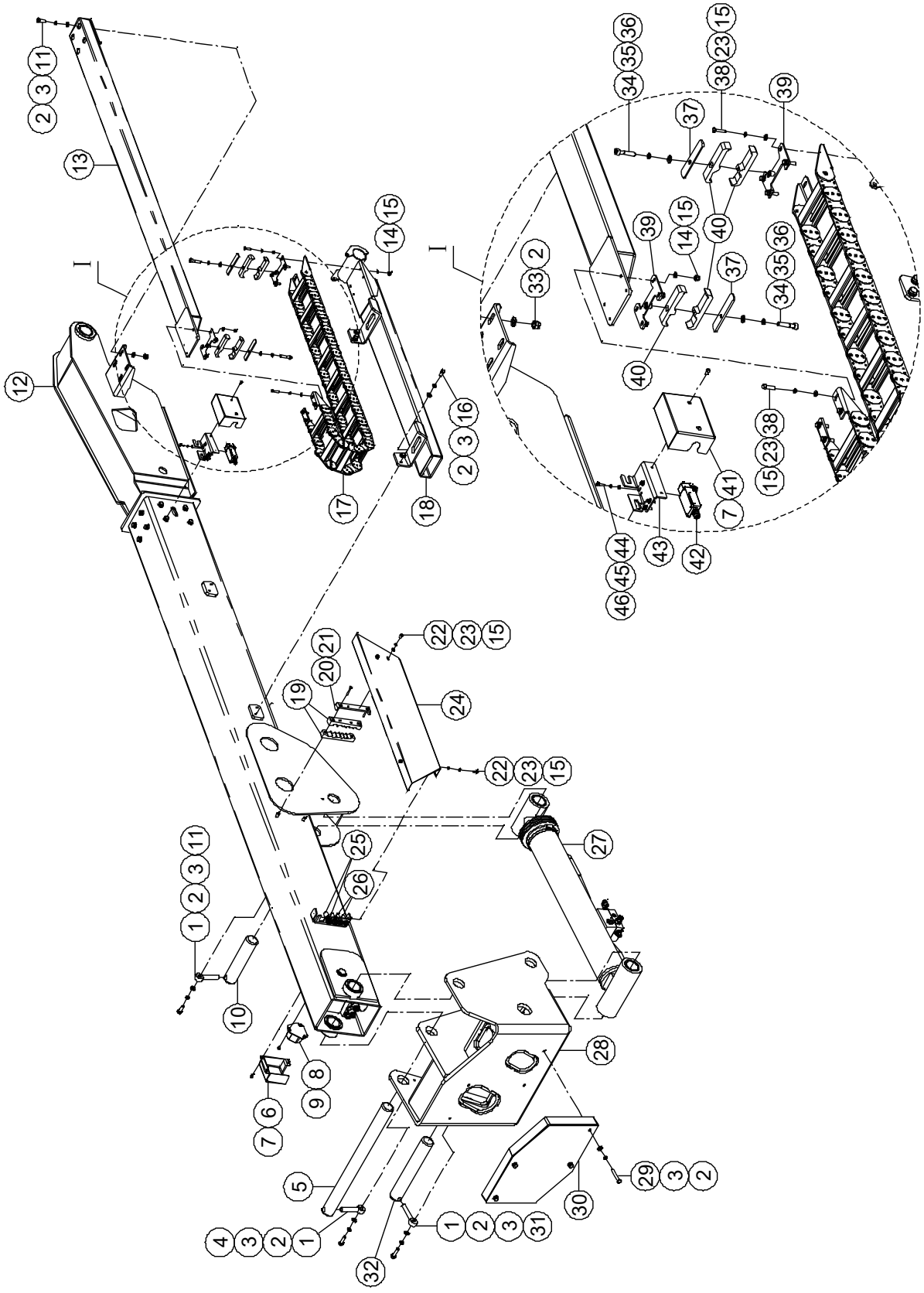

Figure 3-3 Telescopic Boom Installation

Item	Part Number	Description	Qty.	Remark
1	00003089	8902-16095B Pin, Lock	3	
2	00000615	Flat Washer GB/T 97.1 10	19	
3	00000679	Spring Washer GB/T 93 10	15	
4	00000684	Bolt GB/T 5783 M10 × 35	1	
5	00000142	895-50576 Pin, Pivot	1	
6	50003071	Cover, Sensor	1	
7	00001229	Screw GB/T 70.2 M5×10	5	
8	00000643	Sensor, Angle	1	
9	00001176	Screw GB/T 70.2 M6×10	3	
10	00000128	895-50211 Pin, Pivot	1	
11	00000683	Bolt GB/T 5783 M10 × 30	5	
12		Telescopic Boom Assembly *(See Figure 3-4 for Breakdown)*	1	GTBZ16A/ GTBZ18A
13	50003092	Cable Tube	1	GTBZ16A
	50003595	Cable Tube	1	GTBZ18A
14	00000742	Nut GB/T 889.1 M6	8	
15	00000620	Flat Washer GB/T 97.1 6	20	
16	00000674	Bolt GB/T 5783 M10 × 20	4	
17	50003091	Carrier	1	GTBZ16A
	50001078	Carrier	1	GTBZ18A
18	50003064	Cable Track Carrier Weldment	1	GTBZ16A
	50001076	Cable Track Carrier Weldment	1	GTBZ18A
19	50000362	Plate, Clamp	2	
20	50000363	Pad, Rubber	1	
21	00000834	Screw GB/T 70.3 M6×40	2	
22	00000745	Bolt GB/T 5783 M6 × 12	4	
23	00000621	Spring Washer GB/T 93 6	12	
24	50003070	Cover	1	
25	00002136	Fitting, Straight	2	

Figure 3-3 Telescopic Boom Installation (Continued)

Item	Part Number	Description	Qty.	Remark
26	00002135	Fitting, Straight	2	
27		Upper Lifting Cylinder Assembly *(See Figure 5-3 for Breakdown)*	1	
28	50003054	Cage, Connection	1	
29	00001984	Bolt GB/T 5782 M10 × 60	4	
30	50003067	Cover	1	
31	00001041	Bolt GB/T 5783 M10 × 40	1	
32	00000131	895-50301 Pin, Pivot	1	
33	00000682	Nut GB/T 889.1 M10	4	
34	00000744	Screw GB/T 70 M8 × 40	2	
35	00000609	Spring Washer GB/T 93 8	2	
36	00000608	Flat Washer GB/T 97.1 8	2	
37	50000368	Pad, Rubber	2	
38	00000619	Bolt GB/T 5783 M6 × 25	8	
39	50000364	Plate, Weldment	2	
40	50000367	Plate, Clamp	4	
41	50000369	Cover, Switch	1	
42	00000748	Switch, Limit	1	
43	50000371	Plate, Bracket	1	
44	00000604	Screw GB/T 70 M4×16	4	
45	00000779	Spring Washer GB/T 93 4	4	
46	00000778	Flat Washer GB/T 97.1 4	4	

Figure 3-4 Telescopic Boom Assembly

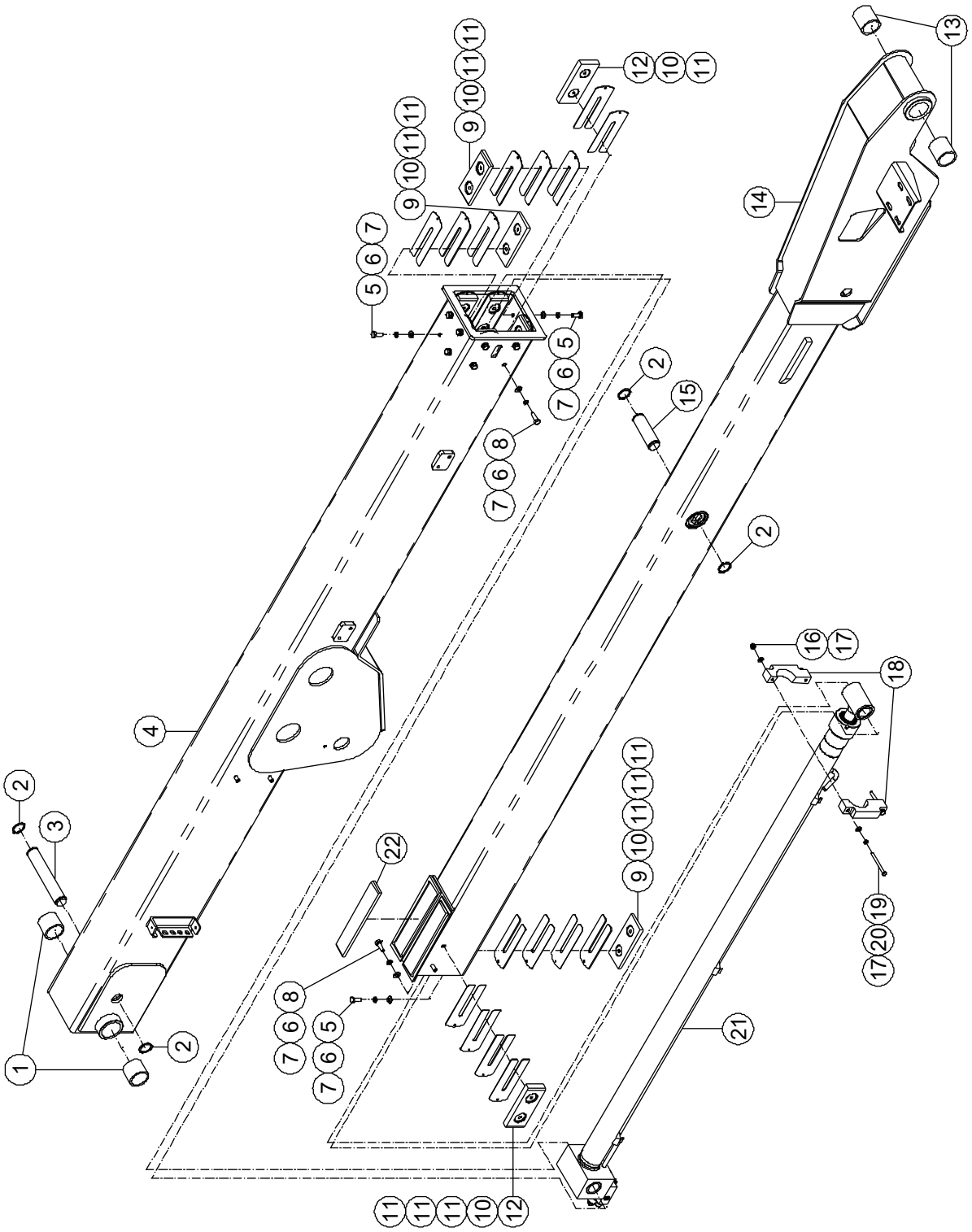

Figure 3-4 Telescopic Boom Assembly

Item	Part Number	Description	Qty.	Remark
1	00000427	8813-506050 Sleeve Bearing	2	
2	00000936	Circlips GB/T 894.1-35	4	
3	00000090	899-35197 Pin, Pivot	1	
4	50003085	Base Boom	1	GTBZ16A
	50003590	Base Boom	1	GTBZ18A
5	00000678	Bolt GB/T 5783 M10 × 25	10	
6	00000679	Spring Washer GB/T 93 10	22	
7	00000615	Flat Washer GB/T 97.1 10	22	
8	00000683	Bolt GB/T 5783 M10 × 30	12	
9	50000728	Pad, Wear	5	
10	50000047	Shim	11	
11	50000401	Shim	21	
12	50000402	Pad, Wear	6	
13	00000428	8813-506060 Sleeve Bearing	2	
14	50003077	Second Boom	1	GTBZ16A
	50003592	Second Boom	1	GTBZ18A
15	00000081	899-35108 Pin, Pivot	1	
16	00000994	Nut GB/T 889.1 M8	2	
17	00000608	Flat Washer GB/T 97.1 8	4	
18	50000794	Bracket	2	
19	00001026	Bolt GB/T 5782 M8 × 80	2	
20	00000609	Spring Washer GB/T 93 8	2	
21		Telescope Cylinder Assembly *(See Figure 5-4 for Breakdown)*	1	
22	50000725	Pad, Wear	2	

Figure 3-5 Jib Assembly Installation

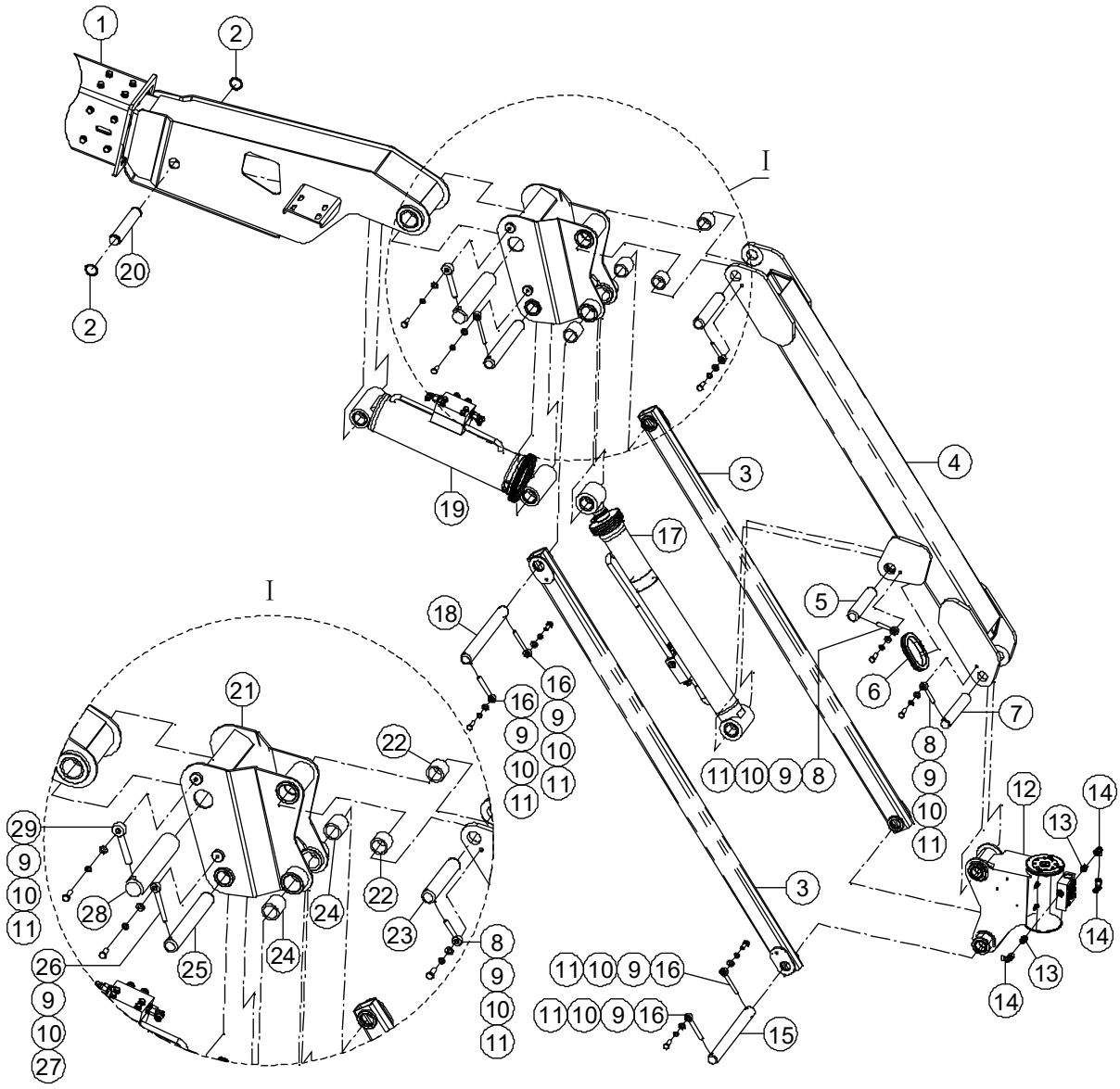

Figure 3-5 Jib Assembly Installation

Item	Part Number	Description	Qty.	Remark
1		Boom Assembly *(See Figure 3-2 for Breakdown)*	1	
2	00000936	Circlips GB/T 894.1-35	2	
3	50000537	Linker, Lower	2	
4	50000527	Linker, Upper	1	
5	00000685	895-35153 Pin, Pivot	1	
6	10000039	Sheath	2	
7	00000064	895-31.8×168 Pin, Pivot	1	
8	00000219	8902-10060 Pin, Lock	3	
9	00000615	Flat Washer GB/T 97.1 10	9	
10	00000679	Spring Washer GB/T 93 10	9	
11	00000683	Bolt GB/T 5783 M10 × 30	8	
12	00000515	Rotate Cylinder Assembly	1	
--	00003662	Housing/Ring Gear Assembly	1	
--	00003663	Counterbalance Valve	1	
--	00003664	Seal Kit for 00000515 Rotate Cylinder	1	
13	00001769	Fitting, Straight	2	
14	00001832	Fitting, 90°	3	
15	00000047	897-31.8×300 Pin, Pivot	1	
16	00000220	8902-10080 Pin, Lock	4	
17		Jib Cylinder Assembly *(See Figure 5-6 for Breakdown)*	1	
18	00000050	897-35300 Pin, Pivot	1	
19		Slave Cylinder Assembly *(See Figure 5-5 for Breakdown)*	1	
20	00000089	899-35174 Pin, Pivot	1	
21	50002775	Jib Basis	1	
22	00000416	8813-354535 Sleeve Bearing	2	
23	00000071	895-35168 Pin, Pivot	1	
24	00000417	8813-354550 Sleeve Bearing	2	

Figure 3-5 Jib Assembly Installation (Continued)

Item	Part Number	Description	Qty.	Remark
25	00000100	895-35248 Pin, Pivot	1	
26	00002481	8902-10100 Pin, Lock	1	
27	00000678	Bolt GB/T 5783 M10 × 25	1	
28	00000129	895-50241 Pin, Pivot	1	
29	00003089	8902-16095B Pin, Lock	1	

Platform

Section 4

Figure 4-1 Platform Assembly Installation

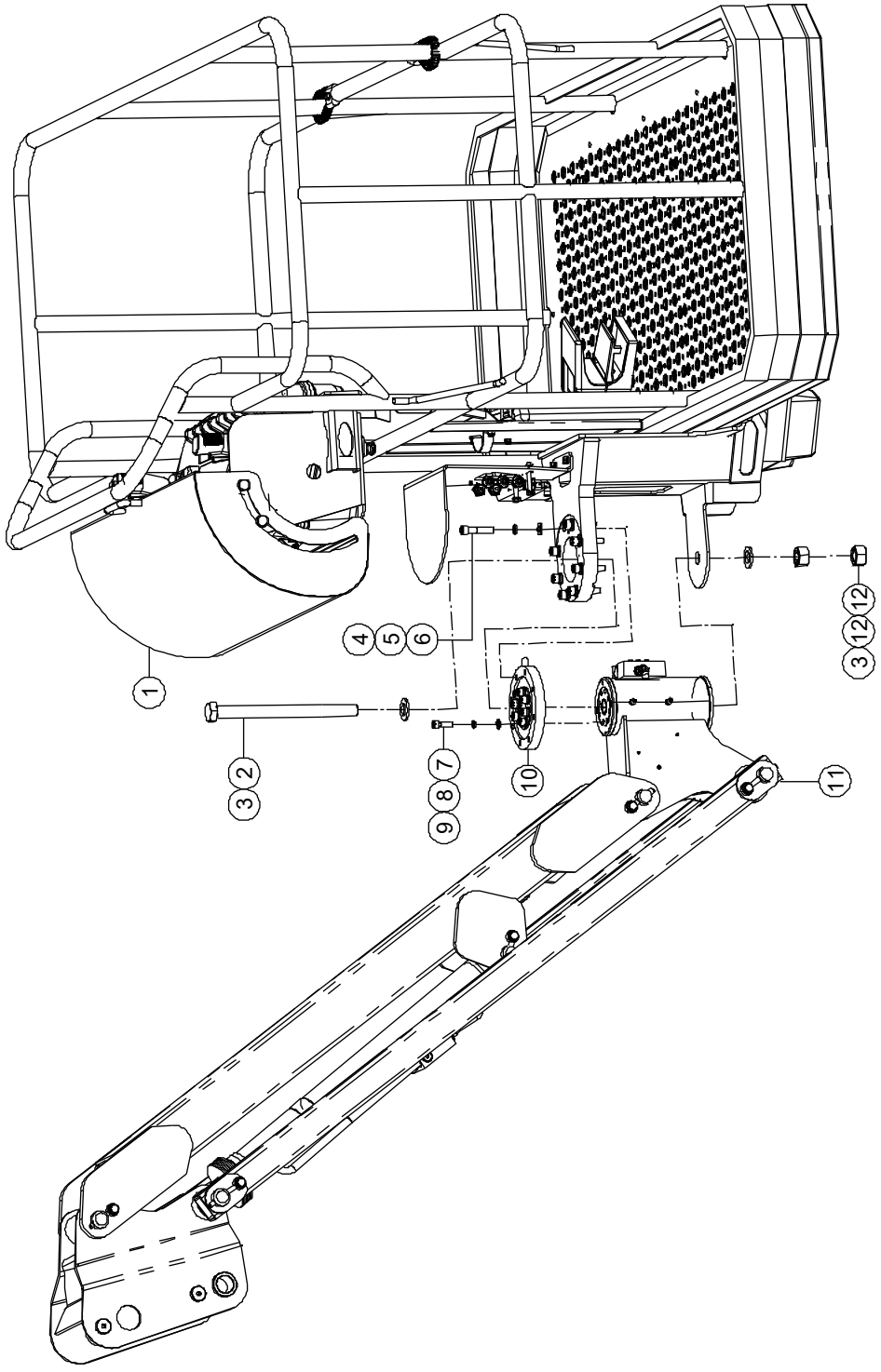

Figure 4-1 Platform Assembly Installation

Item	Part Number	Description	Qty.	Remark
1		Platform Assembly *(See Figure 4-2 for Breakdown)*	1	
2	00001853	Bolt GB/T 5782 M24 × 300	1	
3	00001159	Flat Washer GB/T 97.1 24	2	
4	00000814	Flat Washer GB/T 97.1 12	8	
5	00000815	Spring Washer GB/T 93 12	8	
6	00001852	Screw GB/T 70 M12 × 55	8	
7	00001059	Screw GB/T 70 M10 × 30	8	
8	00000679	Spring Washer GB/T 93 10	8	
9	00000615	Flat Washer GB/T 97.1 10	8	
10	00006204	Sensor, Load	1	
11		Jib Assembly *(See Figure 3-5 for Breakdown)*	1	
12	00001854	Nut GB/T 6170 M24	2	

Figure 4-2 Platform Assembly

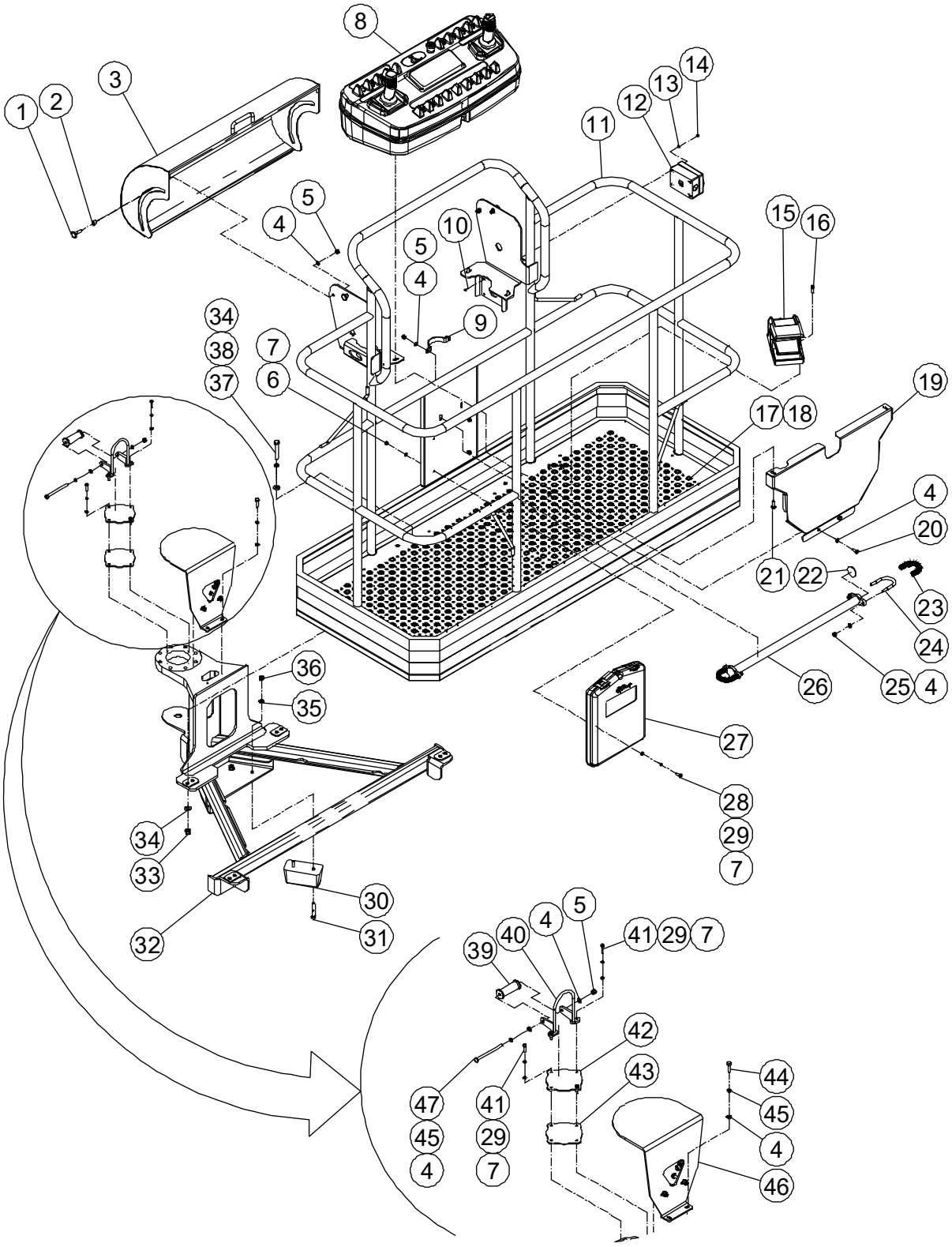

Figure 4-2 Platform Assembly

Item	Part Number	Description	Qty.	Remark
1	50000569	Pin	4	
2	50000568	Bushing	4	
3	50000570	Shield	1	
4	00000608	Flat Washer GB/T 97.1 8	20	
5	00000994	Nut GB/T 889.1 M8	7	
6	00000742	Nut GB/T 889.1 M6	8	
7	00000620	Flat Washer GB/T 97.1 6	16	
8		Platform Control Box Assembly *(See Figure 4-3 for Breakdown)*	1	
9	50000554	Hoop	1	
10	00001848	Screw GB/T 818 M4 × 14 - Z	2	
11	50001026	Platform Weldment	1	
12	00000668	Electrical Outlet	1	
13	00000778	Flat Washer GB/T 97.1 4	2	
14	00001236	Nut GB/T 889.1 M4	2	
15	00000656	Footswitch	1	
16	00001034	Screw GB/T 70 M6 × 25	4	
17	50000625	Deck Plate	1	
18	00001991	Rivet GB/T 12618.4 4.8×16	14	
19	50001023	Plate, Decal	1	
20	00000875	Bolt GB/T 5783 M8 × 20	2	
21	00000993	Bolt GB/T 5783 M8 × 25	4	
22	92100249	Anti-Scratch	2	
23	92100232	Jacket	2	
24	92100228	Clamp	2	
25	00001163	Nut GB/T 6182 M8	4	
26	50005448	Doorstop	1	
27	50000555	Box, Manual	1	
28	00000743	Bolt GB/T 5783 M6 × 20	4	

Figure 4-2 Platform Assembly (Continued)

Item	Part Number	Description	Qty.	Remark
29	00000621	Spring Washer GB/T 93 6	8	
30	10000041	Plate, Rubber	2	
31	00000614	Screw GB/T 70 M10 × 60	4	
32	50000642	Support Weldment	1	
33	00001056	Nut GB/T 889.1 M12	3	
34	00000814	Flat Washer GB/T 97.1 12	6	
35	00000615	Flat Washer GB/T 97.1 10	4	
36	00000682	Nut GB/T 889.1 M10	4	
37	00001847	Bolt GB/T 5783 M12 × 70	3	
38	00000815	Spring Washer GB/T 93 12	3	
39	50002764	Wheel, Nylon	1	
40	50000581	Clamp	1	
41	00000619	Bolt GB/T 5783 M6 × 25	4	
42	50000580	Cover	1	
43	50000579	Plate, Seal	1	
44	00000995	Bolt GB/T 5783 M8 × 30	2	
45	00000609	Spring Washer GB/T 93 8	7	
46		Transition Manifold Assembly with Fittings *(See Figure 4-4 for Breakdown)*	1	
47	00003146	Bolt GB/T 5782 M8 × 110	1	

Figure 4-3 Platform Control Box Assembly

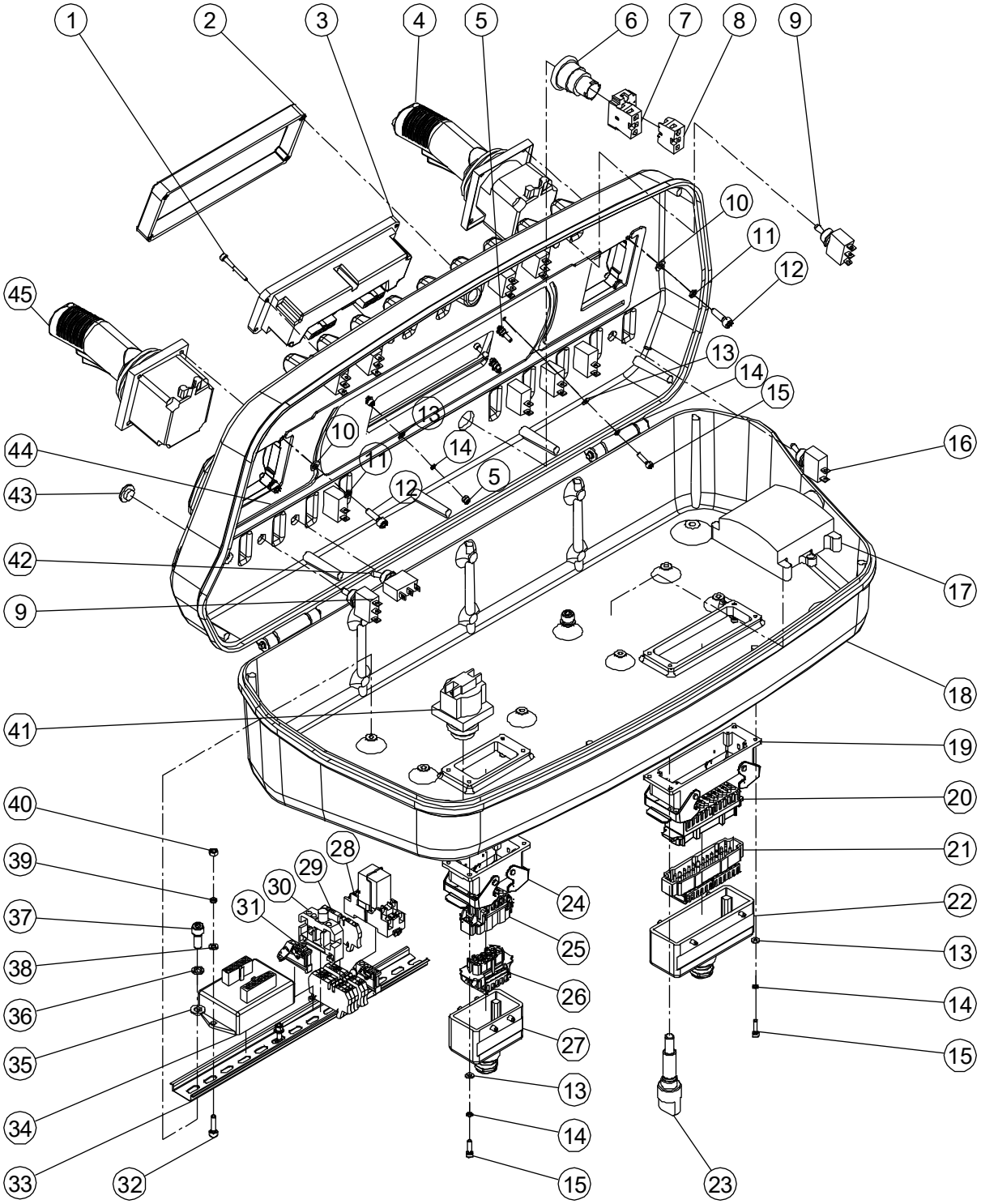

Figure 4-3 Platform Control Box Assembly

Item	Part Number	Description	Qty.	Remark
1	00001235	Screw GB/T 70 M4 × 35	4	
2	50000697	Shield, Display	1	
3	00000650	Shield, Display	1	
4	00000657	Joystick (Steer &Drive)	1	
5	00001236	Nut GB/T 889.1 M4	4	
6	00000754	Red Mushroom Head	1	
7	00000752	Base with 1 NC Contact	1	
8	00001245	NC Contact	1	
9	00000654	Switch, Toggle	6	
10	00000620	Flat Washer GB/T 97.1 6	8	
11	00000621	Spring Washer GB/T 93 6	8	
12	00000774	Screw GB/T 70 M6 × 20	8	
13	00000778	Flat Washer GB/T 97.1 4	16	
14	00000779	Spring Washer GB/T 93 4	16	
15	00000604	Screw GB/T 70 M4×16	12	
16	00001855	Switch, Toggle	5	
17	00003164	Load Sensor Amplifier	1	
18	50000700	Platform control box	1	
19	00000732	Housing	1	
20	00000728	Female Insert	1	
21	00000730	Male Insert	1	
22	00000726	Hood	1	
23	50000704	Bolt, Lock	1	
24	00000731	Housing	1	
25	00000729	Male Insert	1	
26	00000727	Female Insert	1	
27	00000725	Hood	1	
28	00000648	Relay	1	
29	00000659	End, Straight	6	

Figure 4-3 Platform Control Box Assembly (Continued)

Item	Part Number	Description	Qty.	Remark
30	00000661	End, Fuse	1	
31	00000660	End, Fixation	2	
32	00000817	Screw GB/T 70 M5 × 20	2	
33	50000025	Bracket	1	
34	00000640	IO-Mode	1	
35	00000608	Flat Washer GB/T 97.1 8	2	
36	00000609	Spring Washer GB/T 93 8	2	
37	00001061	Screw GB/T 70 M8 × 20	2	
38	00000605	Flat Washer GB/T 97.1 5	2	
39	00000606	Spring Washer GB/T 93 5	2	
40	00000688	Nut GB/T 6170 M5	2	
41	00000665	Alarm	1	
42	00000653	Switch, Toggle	1	
43	00000667	Plug, Toggle Switch	1	
44	50005201	Bracket, harness	1	
45	00000658	Joystick (Lift & Swing)	1	

Figure 4-4 Transition Manifold Assembly with Fittings

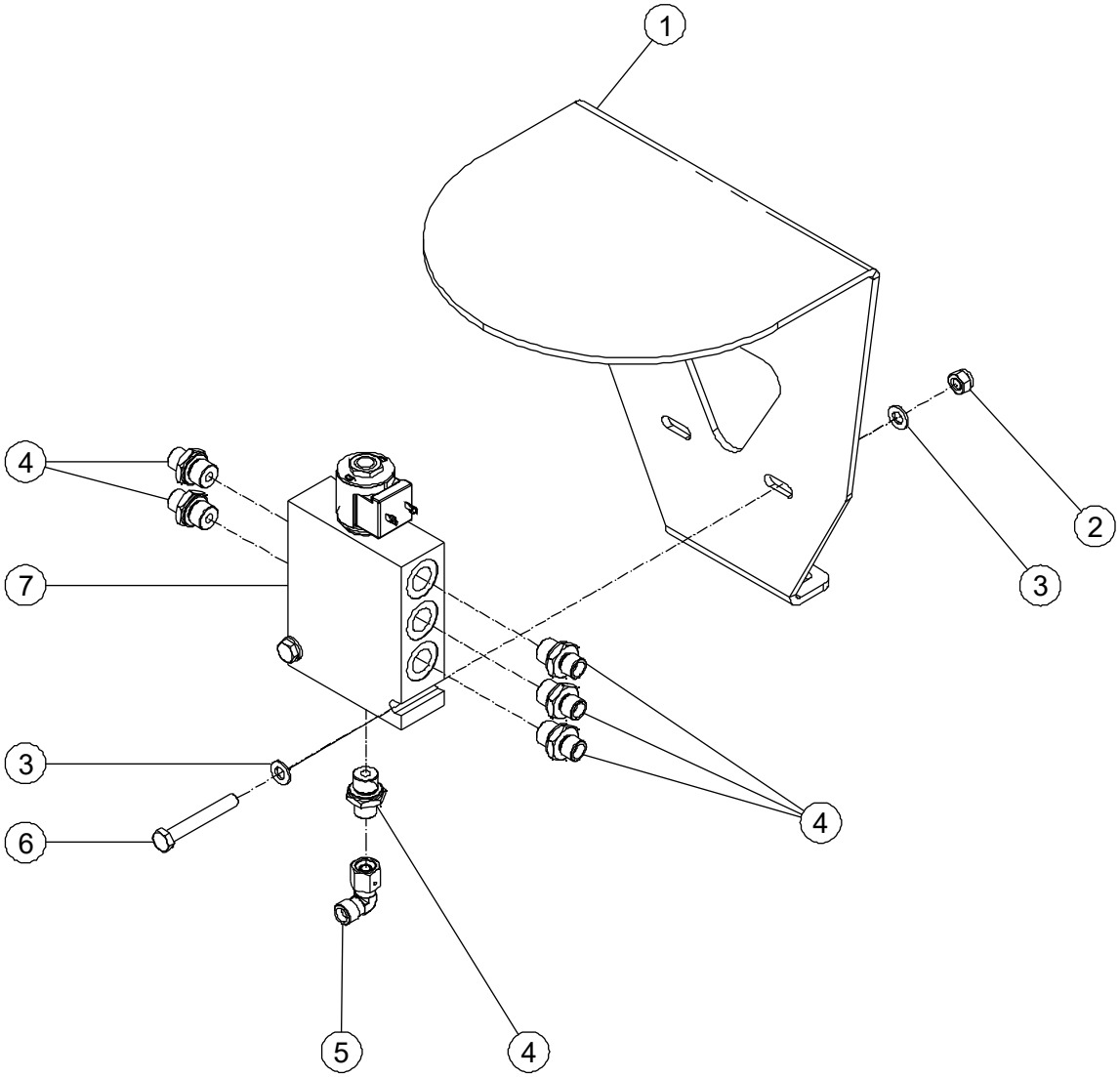

Figure 4-4 Transition Manifold Assembly with Fittings

Item	Part Number	Description	Qty.	Remark
1	50000620	Bracket	1	
2	00000994	Nut GB/T 889.1 M8	2	
3	00000608	Flat Washer GB/T 97.1 8	4	
4	00002921	Fitting, Straight	6	
5	00001832	Fitting, 90°	1	
6	00001851	Bolt GB/T 5783 M8 × 60	2	
7	00000505	Transition Manifold Assembly *(See Figure 4-5 for Breakdown)*	1	

Figure 4-5 Transition Manifold Assembly

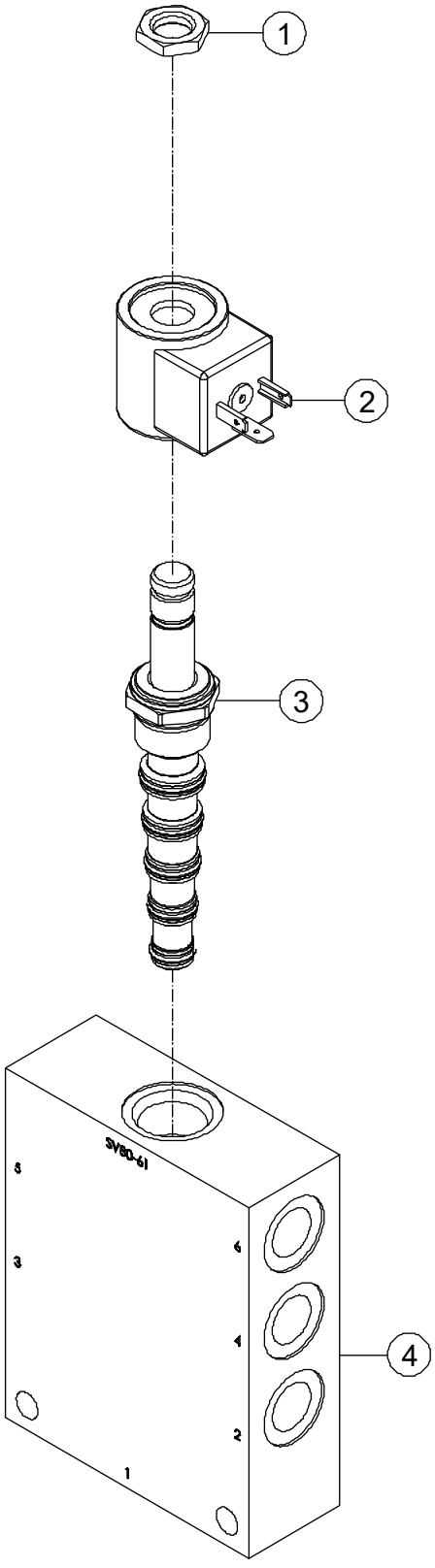

Figure 4-5 Transition Manifold Assembly

Item	Part Number	Description	Qty.	Remark
1	00003017	Nut	1	
2	00002043	Coil	1	
3	00003595	Cartridge without Coil	1	
4	00003598	Body	1	

Cylinder

Section 5

Figure 5-1 Lower Lifting Cylinder Assembly

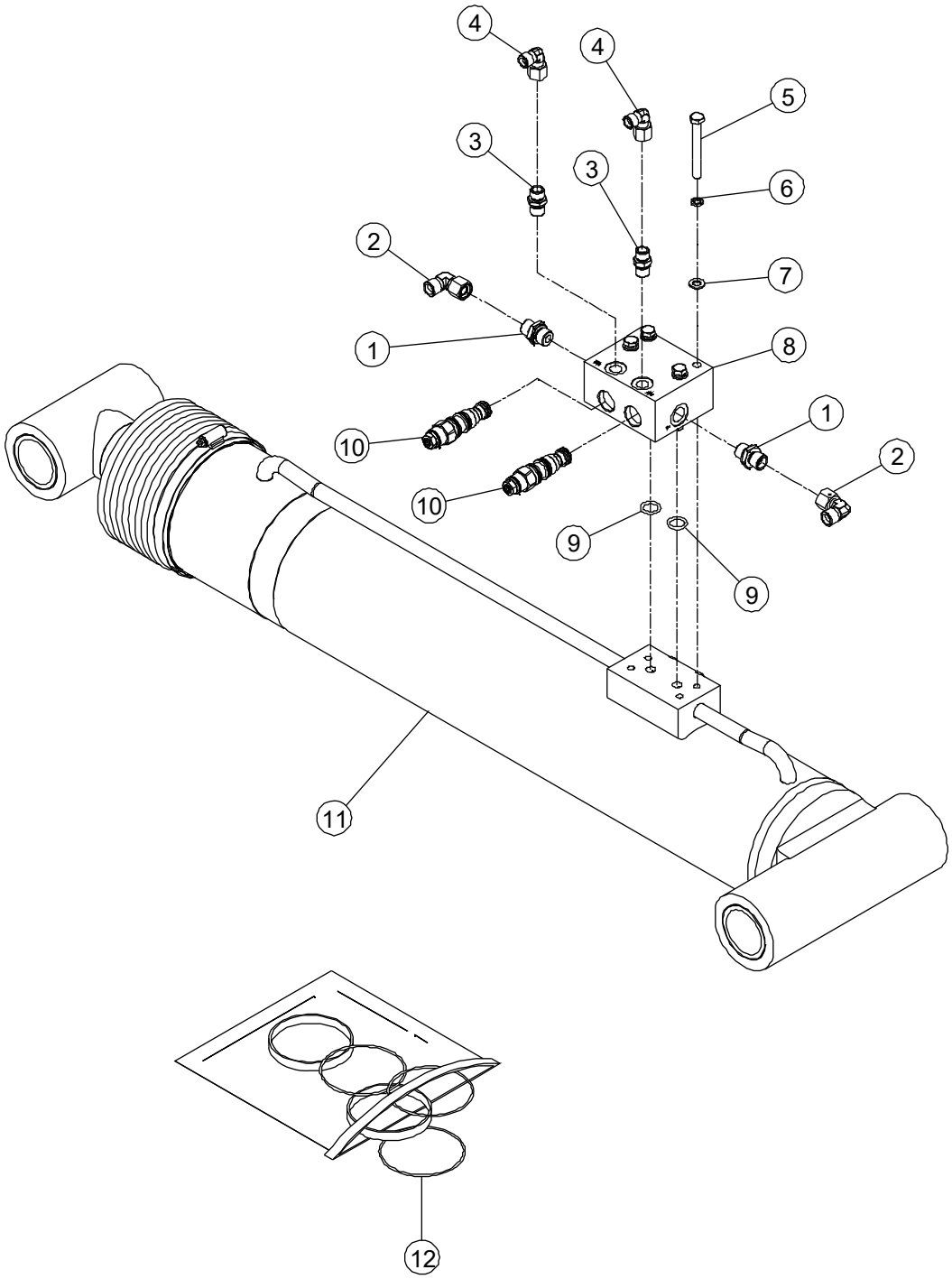

Figure 5-1 Lower Lifting Cylinder Assembly

Item	Part Number	Description	Qty.	Remark
1	00001291	Fitting, Straight	2	
2	00001833	Fitting, 90°	2	
3	00001282	Fitting, Straight	2	
4	00001832	Fitting, 90°	2	
5	00001860	Bolt GB/T 5782 M8 × 70	4	
6	00000609	Spring Washer GB/T 93 8	4	
7	00000608	Flat Washer GB/T 97.1 8	4	
8	00003849	Body	1	
9	00001709	O-Ring As568A 15.54×2.62	2	
10	00003435	Cartridge, Valve (Counterbalance)	2	
11	50002974	Lower Lifting Cylinder Assembly	1	
12	50003164	Seal Kit 63/40	1	

Figure 5-2 Mid Lifting Cylinder Assembly

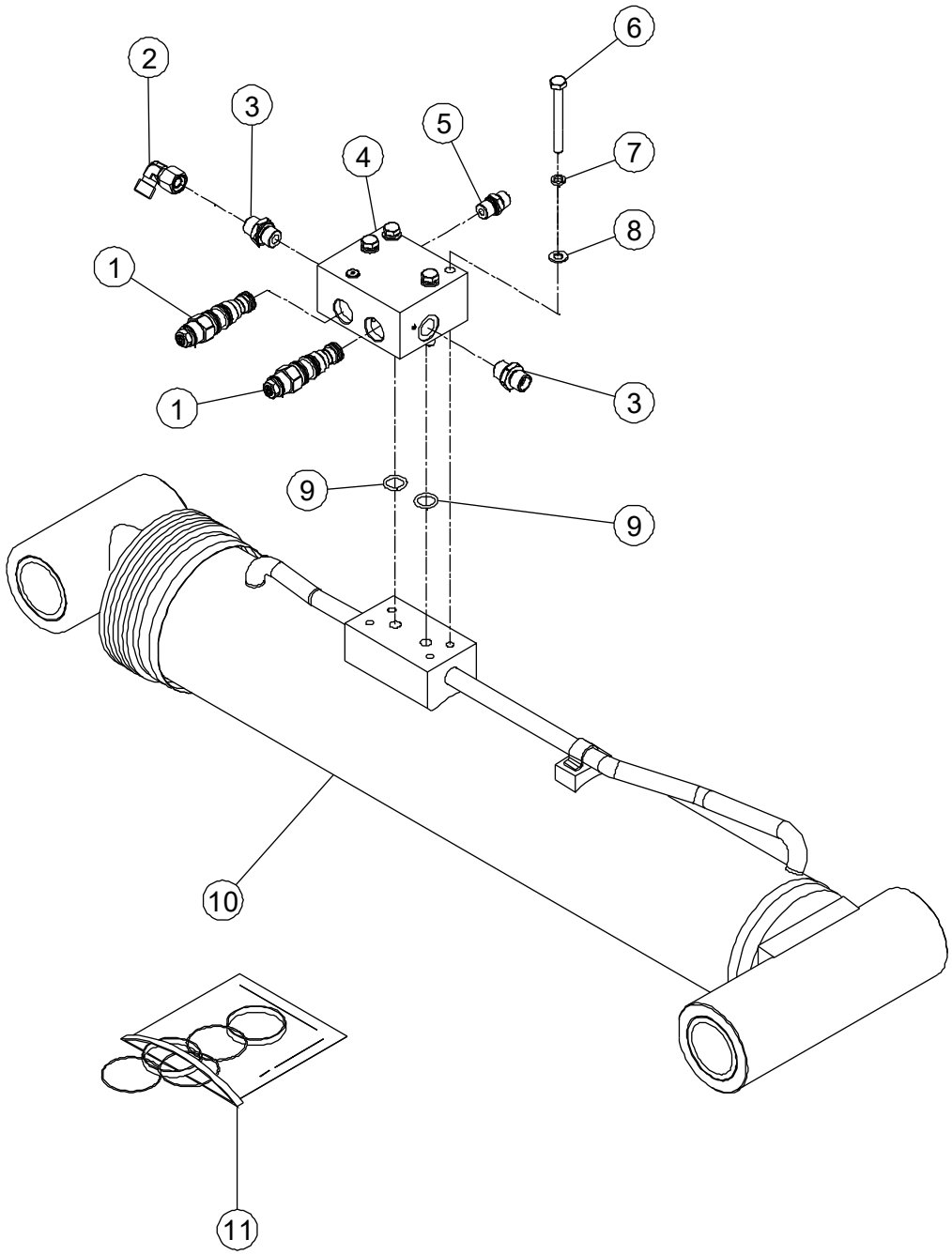

Figure 5-2 Mid Lifting Cylinder Assembly

Item	Part Number	Description	Qty.	Remark
1	00003435	Cartridge, Valve (Counterbalance)	2	
2	00001833	Fitting, 90°	1	
3	00001291	Fitting, Straight	2	
4	00003852	Body	1	
5	00001282	Fitting, Straight	1	
6	00001860	Bolt GB/T 5782 M8 × 70	4	
7	00000609	Spring Washer GB/T 93 8	4	
8	00000608	Flat Washer GB/T 97.1 8	4	
9	00001709	O-Ring As568A 15.54×2.62	2	
10	50003100	Mid Lifting Cylinder Assembly	1	
11	50003438	Seal Kit 110/63	1	

Figure 5-3 Upper Lifting Cylinder Assembly

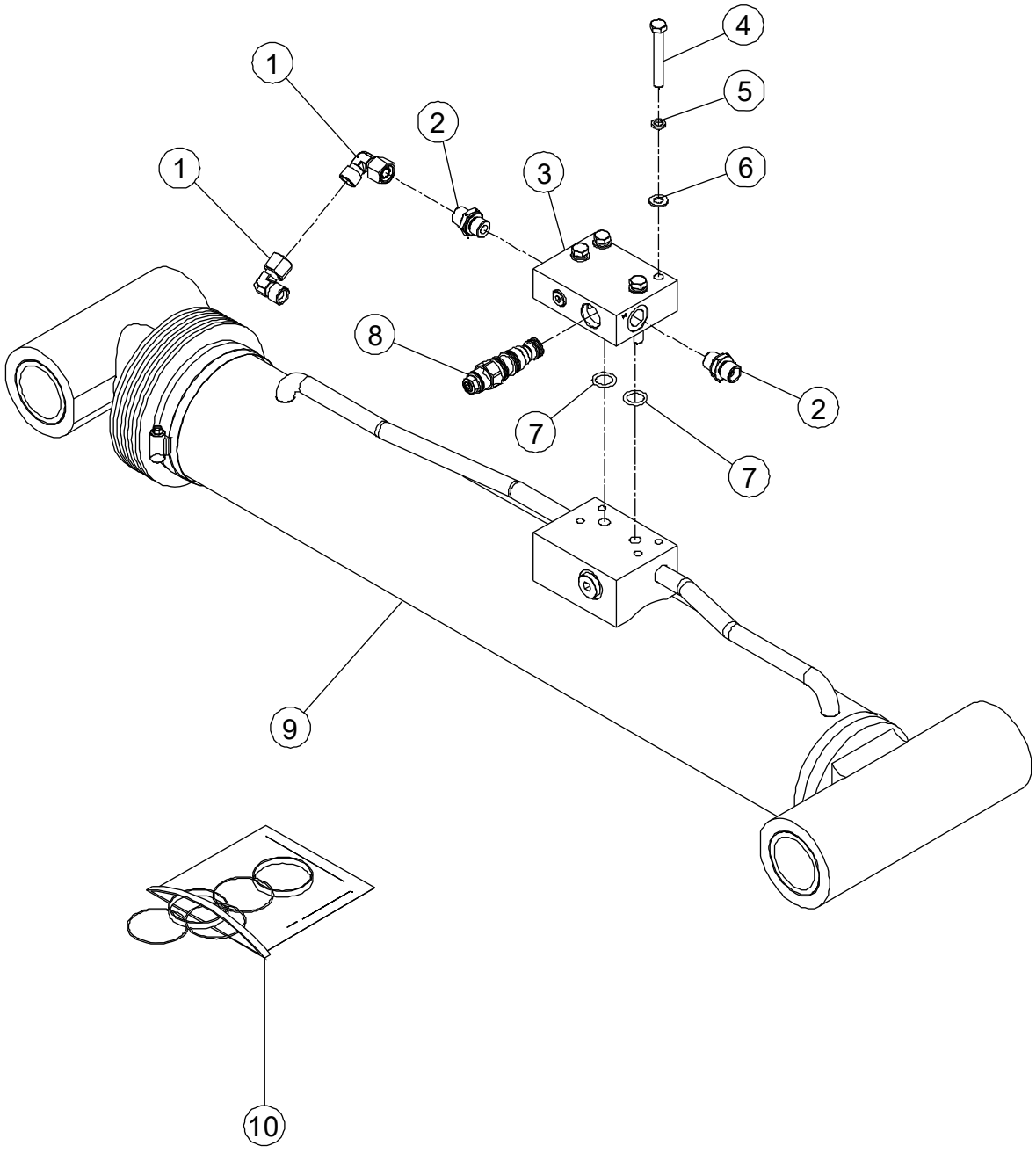

Figure 5-3 Upper Lifting Cylinder Assembly

Item	Part Number	Description	Qty.	Remark
1	00001833	Fitting, 90°	2	
2	00001291	Fitting, Straight	2	
3	00003854	Body	1	
4	00001851	Bolt GB/T 5783 M8 × 60	4	
5	00000609	Spring Washer GB/T 93 8	4	
6	00000608	Flat Washer GB/T 97.1 8	4	
7	00001709	O-Ring As568A 15.54×2.62	2	
8	00003435	Cartridge, Valve (Counterbalance)	1	
9	50003072	Upper Lifting Cylinder Assembly	1	
10	50003358	Seal Kit 100/75	1	

Figure 5-4 Telescope Cylinder Assembly

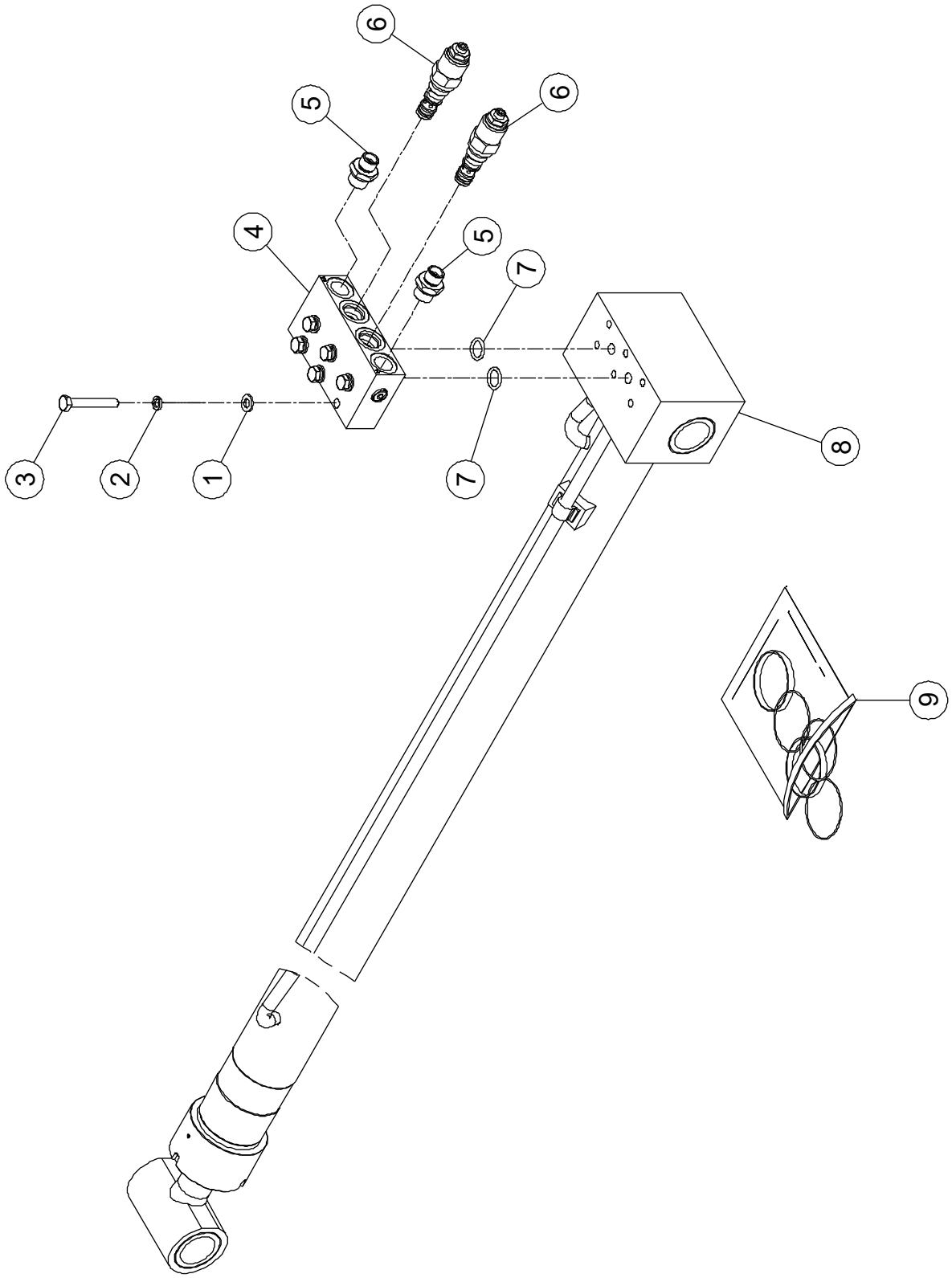

Figure 5-4 Telescope Cylinder Assembly

Item	Part Number	Description	Qty.	Remark
1	00000608	Flat Washer GB/T 97.1 8	6	
2	00000609	Spring Washer GB/T 93 8	6	
3	00002507	Bolt GB/T 5783 M8 × 55	6	
4	00003855	Body	1	
5	00001292	Fitting, Straight	2	
6	00003856	Cartridge, Valve (Counterbalance)	2	
7	00001709	O-Ring As568A 15.54×2.62	2	
8	50003076	Telescope Cylinder Assembly	1	GTBZ16A
	50003417	Telescope Cylinder Assembly	1	GTBZ18A
9	50003375	Seal Kit 50/32	1	

Figure 5-5 Slave Cylinder Assembly

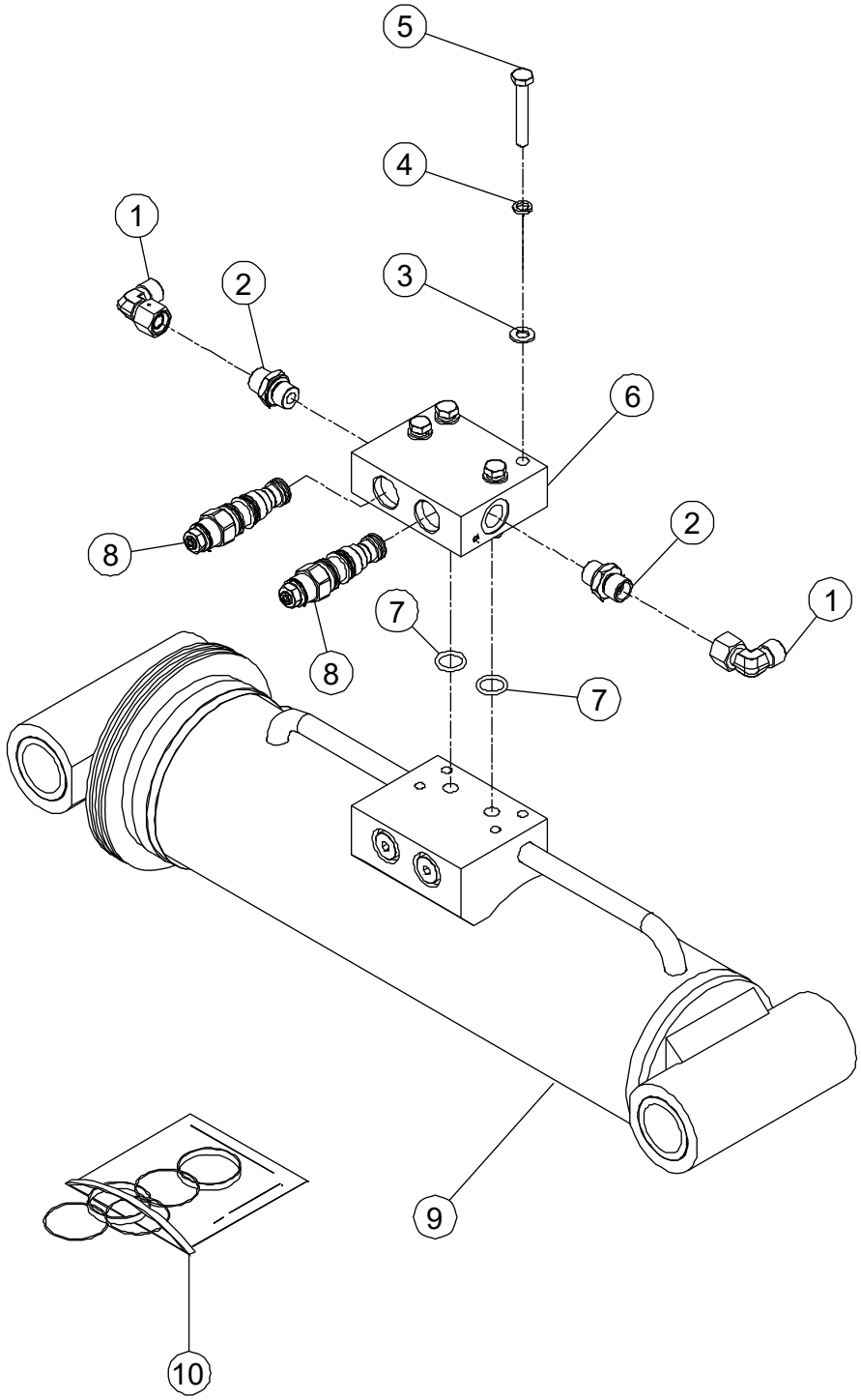

Figure 5-5 Slave Cylinder Assembly

Item	Part Number	Description	Qty.	Remark
1	00001833	Fitting, 90°	2	
2	00001291	Fitting, Straight	2	
3	00000608	Flat Washer GB/T 97.1 8	4	
4	00000609	Spring Washer GB/T 93 8	4	
5	00003607	Bolt GB/T 5783 M8 × 50	4	
6	00003853	Body	1	
7	00001709	O-Ring As568A 15.54×2.62	2	
8	00003435	Cartridge, Valve (Counterbalance)	2	
9	50002973	Slave Cylinder Assembly	1	
10	50003388	Seal Kit 100/40	1	

Figure 5-6 Jib Cylinder Assembly

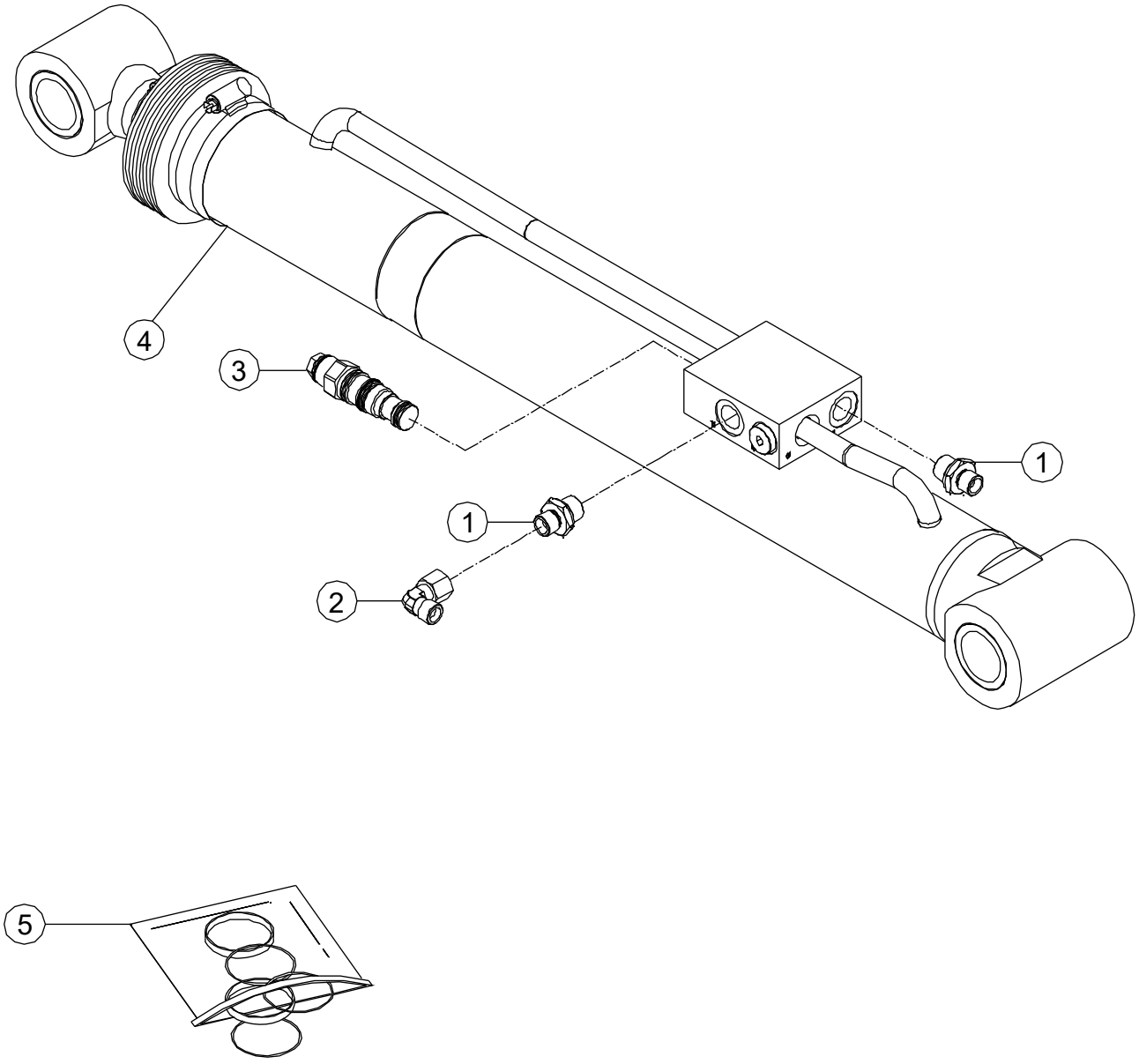

Figure 5-6 Jib Cylinder Assembly

Item	Part Number	Description	Qty.	Remark
1	00002921	Fitting, Straight	2	
2	00001832	Fitting, 90°	1	
3	00003419	Cartridge, Valve (Counterbalance)	1	
4	50000086	Jib Cylinder Assembly	1	
5	50003164	Seal Kit 63/40	1	

Figure 5-7 Left Axle Lockout Cylinder Assembly

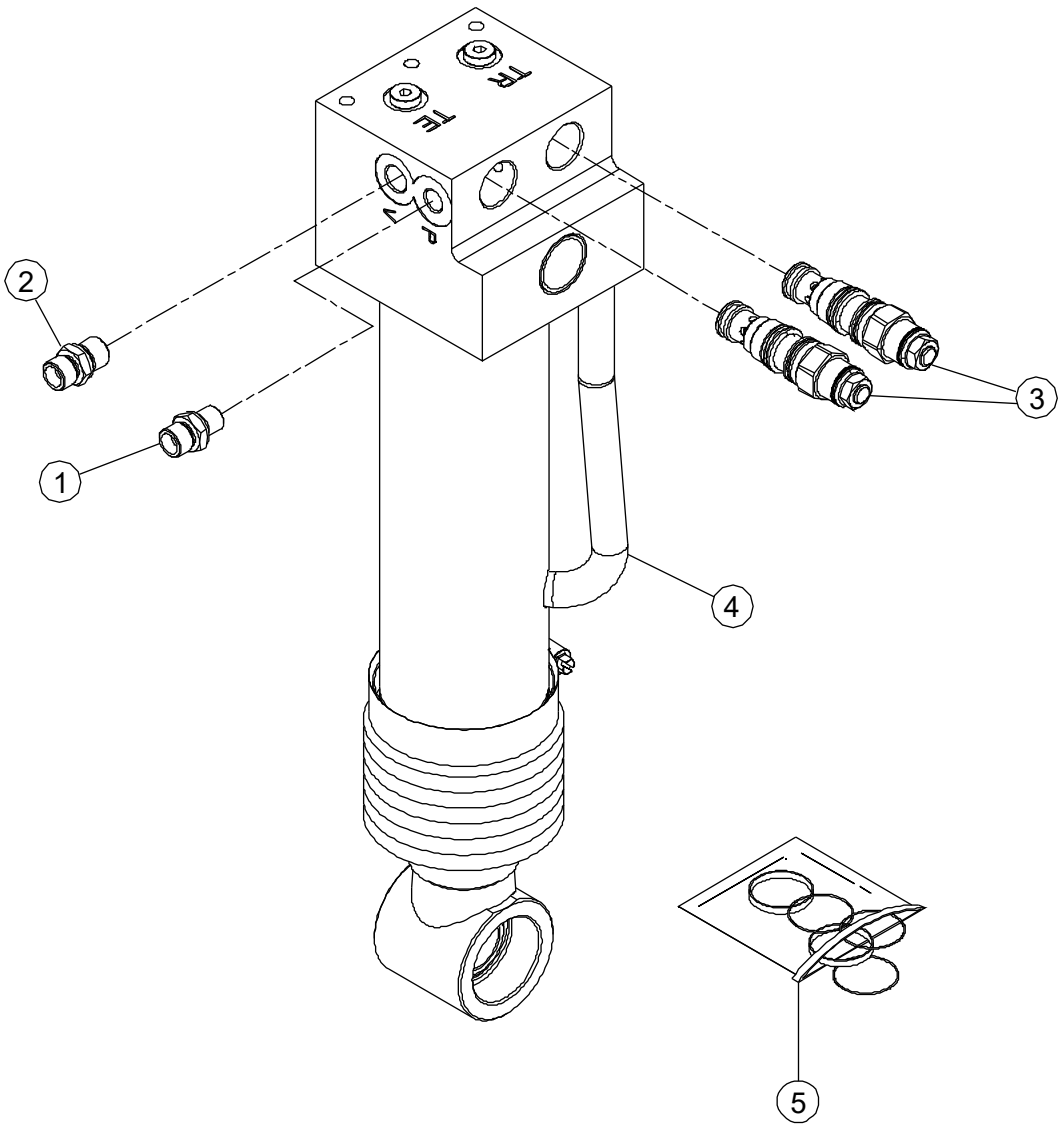

Figure 5-7 Left Axle Lockout Cylinder Assembly

Item	Part Number	Description	Qty.	Remark
1	00001271	Fitting, Straight	1	
2	00001282	Fitting, Straight	1	
3	00003628	Cartridge, Valve (Counterbalance)	2	
4	50002860	Left Axle Lockout Cylinder Assembly	1	
5	50003401	Seal Kit 63/45	1	

Figure 5-8 Right Axle Lockout Cylinder Assembly

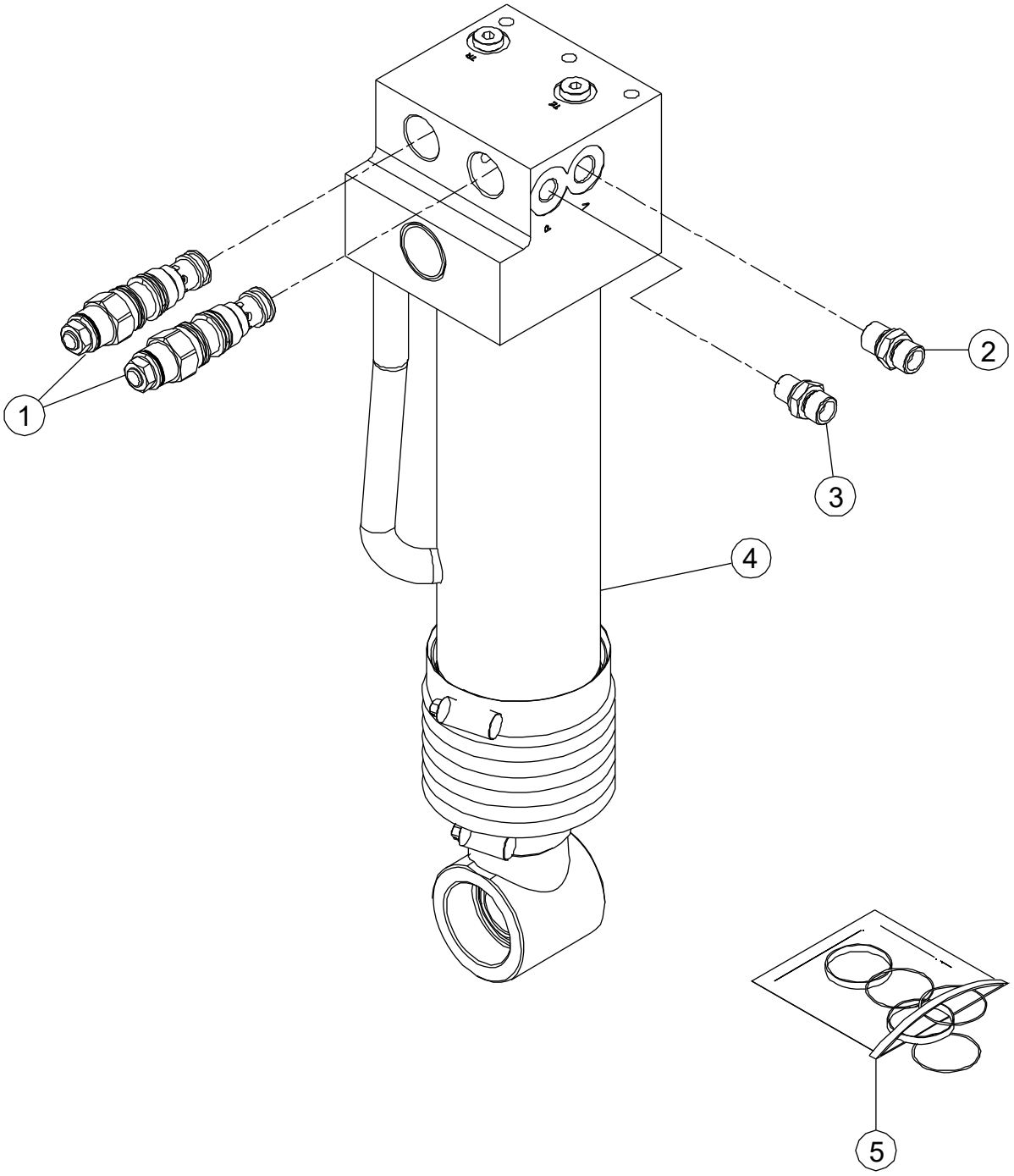

Figure 5-8 Right Axle Lockout Cylinder Assembly

Item	Part Number	Description	Qty.	Remark
1	00003628	Cartridge, Valve (Counterbalance)	2	
2	00001282	Fitting, Straight	1	
3	00001271	Fitting, Straight	1	
4	50002859	Right Axle Lockout Cylinder Assembly	1	
5	50003401	Seal Kit 63/45	1	

Figure 5-9 Steer Cylinder Assembly

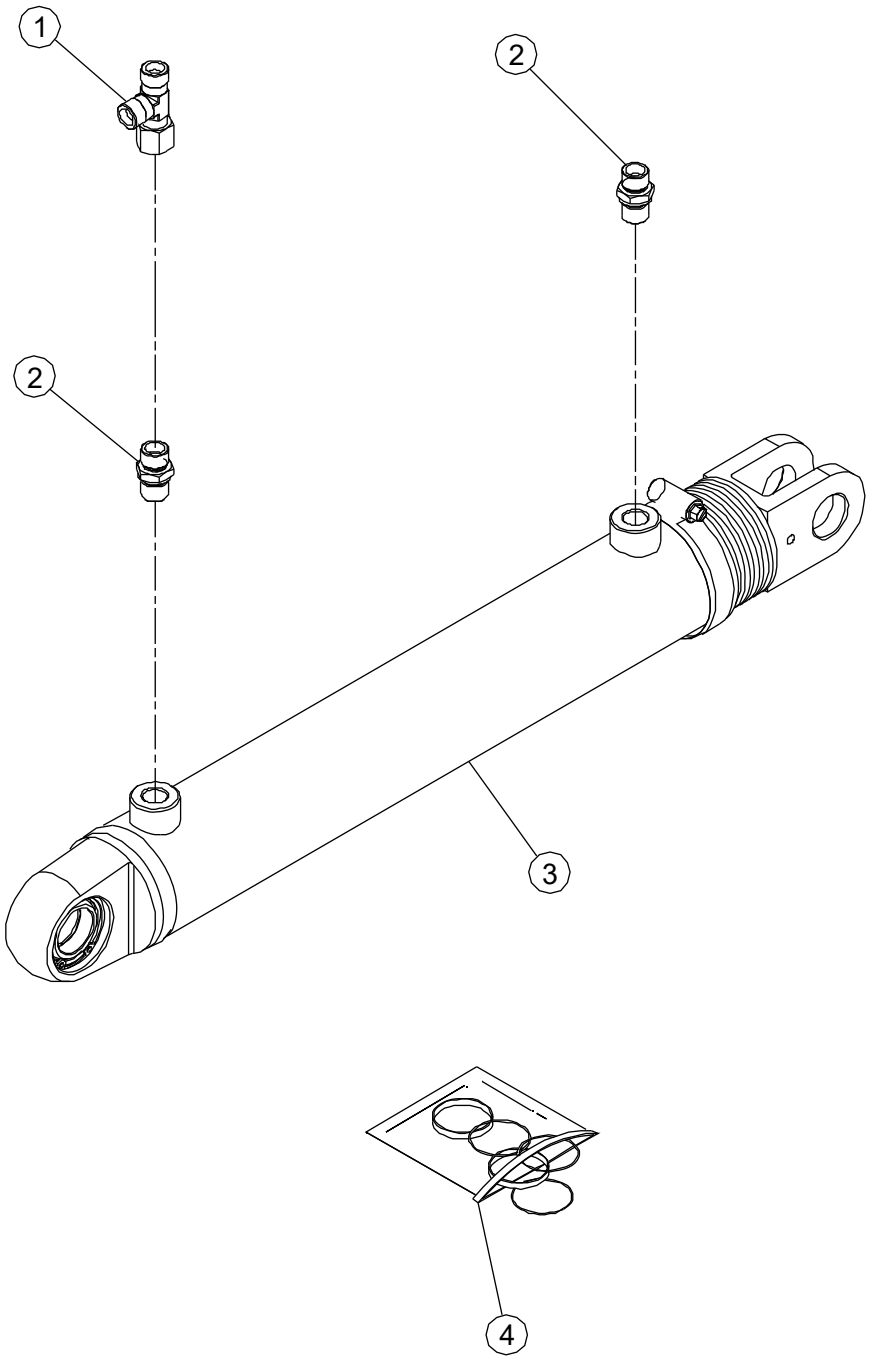

Figure 5-9 Steer Cylinder Assembly

Item	Part Number	Description	Qty.	Remark
1	00001237	Fitting, Tee	1	
2	00001282	Fitting, Straight	2	
3	50002899	Steer Cylinder Assembly	1	
4	50003415	Seal Kit 50/25	1	

Hydraulic

Section 6

Figure 6-1 Turntable- Hydraulic Circuit

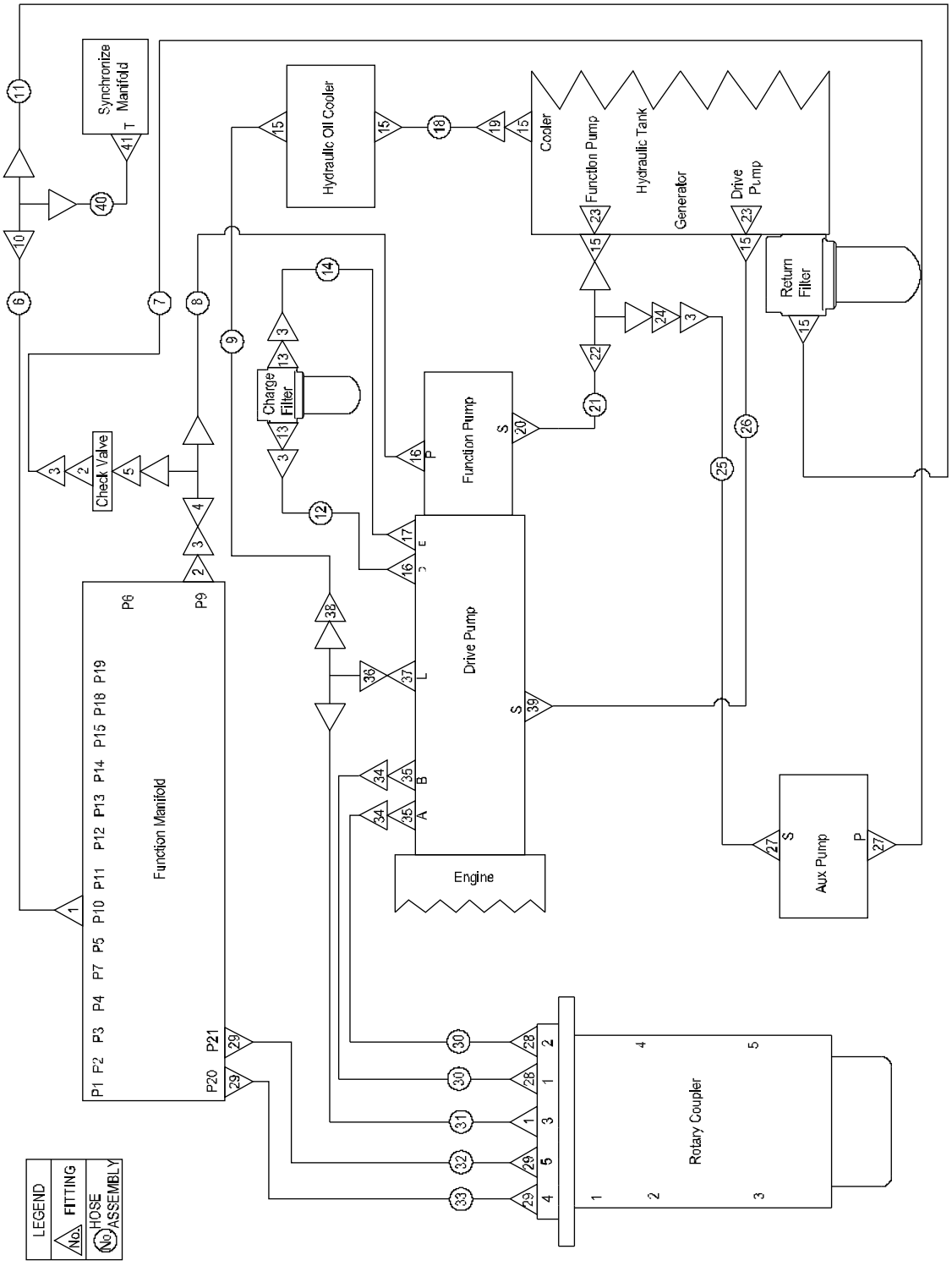

Figure 6-1 Turntable- Hydraulic Circuit

Item	Part Number	Description	Qty.	Remark
1	00001270	Fitting, Straight	2	
2	00001264	Fitting, Straight	2	
3	00001835	Fitting, 90°	5	
4	00001240	Fitting, Tee	1	
5	00003583	Fitting, Straight	1	
6	50003551	Hose Assembly	1	
7	50003599	Hose Assembly	1	
8	50003547	Hose Assembly	1	
9	50003545	Hose Assembly	1	
10	50003298	Fitting, Tee	1	
11	50003552	Hose Assembly	1	
12	50003543	Hose Assembly	1	
13	00002069	Fitting, Straight	2	
14	50003544	Hose Assembly	1	
15	00002071	Fitting, Straight	6	
16	00001776	Fitting, Straight	2	
17	00003734	Fitting, Straight	1	
18	50003550	Hose Assembly	1	
19	00001837	Fitting, 90°	1	
20	00001782	Fitting, Straight	1	
21	50003546	Hose Assembly	1	
22	00001242	Fitting, Tee	1	
23	00000519	Strainer, Suction	2	
24	00003844	Fitting, Straight	1	
25	50003598	Hose Assembly	1	
26	50003539	Hose Assembly	1	
27	00001507	Fitting, Straight	2	
28	00001285	Fitting, Straight	2	
29	00001282	Fitting, Straight	4	

Figure 6-1 Turntable- Hydraulic Circuit (Continued)

Item	Part Number	Description	Qty.	Remark
30	50003540	Hose Assembly	2	
31	50003542	Hose Assembly	1	
32	50003309	Hose Assembly	1	
33	50003548	Hose Assembly	1	
34	00001843	Fitting, 90°	2	
35	00001790	Fitting, Straight	2	
36	00002123	Fitting, Tee	1	
37	00001780	Fitting, Straight	1	
38	00001836	Fitting, 90°	1	
39	00001783	Fitting, Straight	1	
40	50003556	Hose Assembly	1	
41	00001292	Fitting, Straight	1	

Figure 6-2 Drive System Hydraulic Circuit

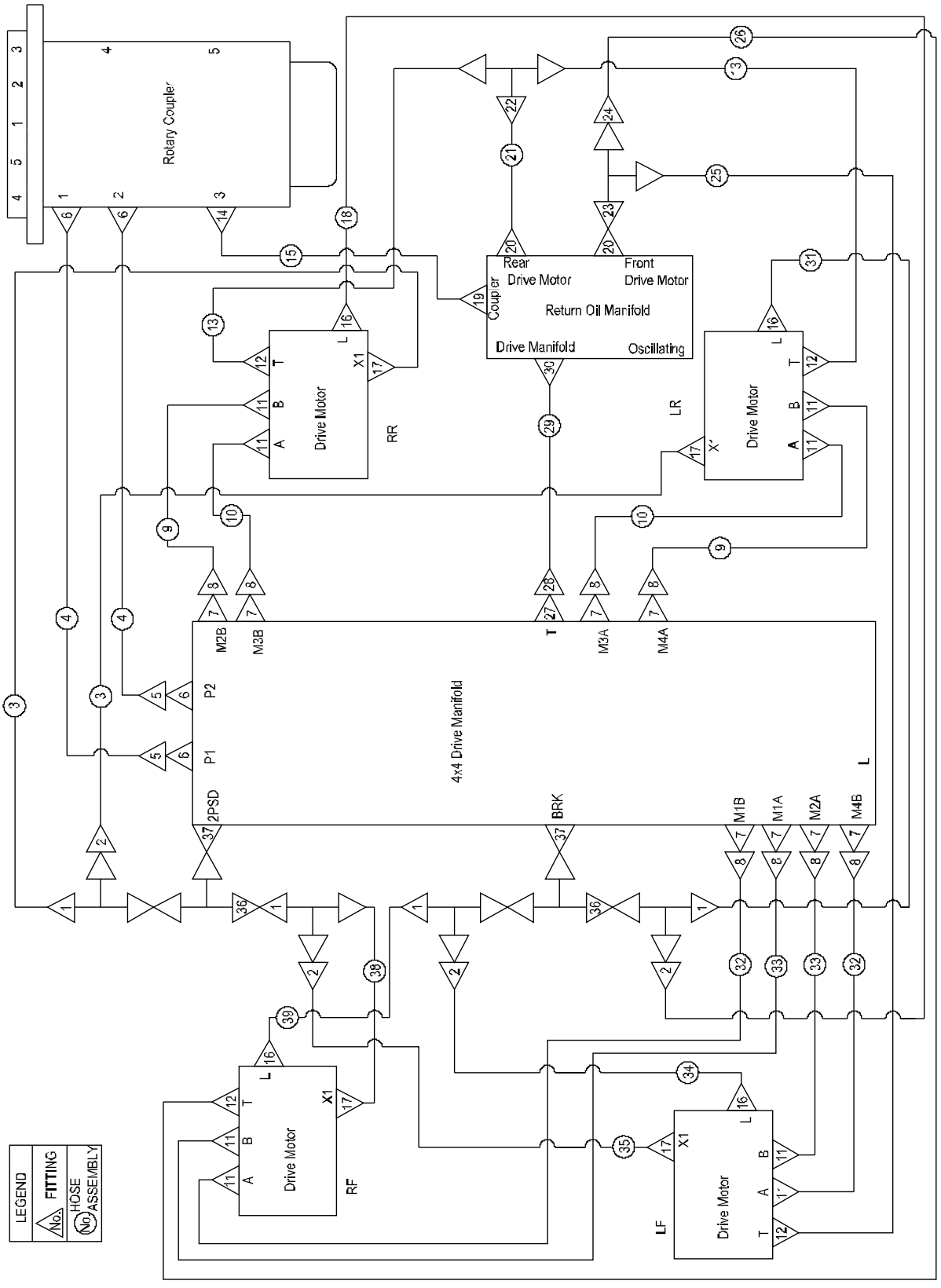

Figure 6-2 Drive System Hydraulic Circuit

Item	Part Number	Description	Qty.	Remark
1	00001237	Fitting, Tee	4	
2	00001832	Fitting, 90°	4	
3	50003323	Hose Assembly	1	
4	50003303	Hose Assembly	2	
5	00001842	Fitting, 90°	2	
6	00001285	Fitting, Straight	4	
7	00001283	Fitting, Straight	8	
8	00001841	Fitting, 90°	8	
9	50003317	Hose Assembly	2	
10	50003318	Hose Assembly	2	
11	00002073	Fitting, Straight	8	
12	00001775	Fitting, Straight	4	
13	50003325	Hose Assembly	2	
14	00003204	Fitting, 90°	1	
15	50003327	Hose Assembly	1	
16	00001769	Fitting, Straight	4	
17	00002072	Fitting, Straight	4	
18	50003321	Hose Assembly	1	
19	00001272	Fitting, Straight	1	
20	00001265	Fitting, Straight	2	
21	50003330	Hose Assembly	1	
22	00002105	Fitting, Tee	1	
23	00001240	Fitting, Tee	1	
24	00001835	Fitting, 90°	1	
25	50003316	Hose Assembly	1	
26	50003310	Hose Assembly	1	
27	00001270	Fitting, Straight	1	
28	00001836	Fitting, 90°	1	
29	50003328	Hose Assembly	1	

Figure 6-2 Drive System Hydraulic Circuit (Continued)

Item	Part Number	Description	Qty.	Remark
30	00001269	Fitting, Straight	1	
31	50003322	Hose Assembly	1	
32	50003307	Hose Assembly	2	
33	50003306	Hose Assembly	2	
34	50003313	Hose Assembly	1	
35	50003314	Hose Assembly	1	
36	00002118	Fitting, Tee	2	
37	00001282	Fitting, Straight	2	
38	50003309	Hose Assembly	1	
39	50003308	Hose Assembly	1	

Figure 6-3 Steering and Oscillating Hydraulic Circuit

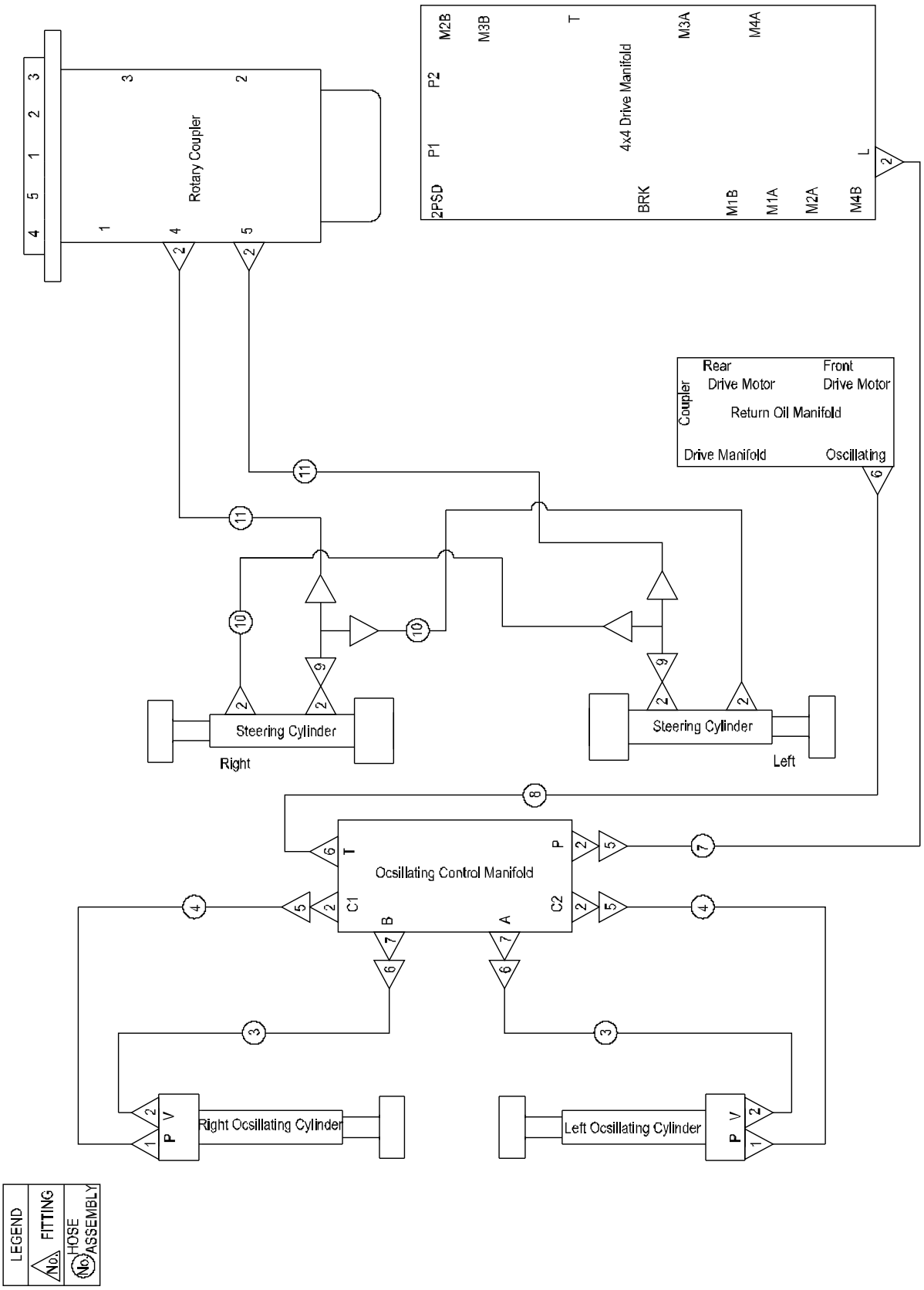

Figure 6-3 Steering and Oscillating Hydraulic Circuit

Item	Part Number	Description	Qty.	Remark
1	00001271	Fitting, Straight	2	
2	00001282	Fitting, Straight	12	
3	50003484	Hose Assembly	2	
4	50003482	Hose Assembly	2	
5	00001832	Fitting, 90°	3	
6	00001263	Fitting, Straight	2	
7	50003305	Hose Assembly	1	
8	50003329	Hose Assembly	1	
9	00001237	Fitting, Tee	2	
10	50003486	Hose Assembly	2	
11	50003480	Hose Assembly	2	

Figure 6-4 Hydraulic Generator Hydraulic Circuit (Option)

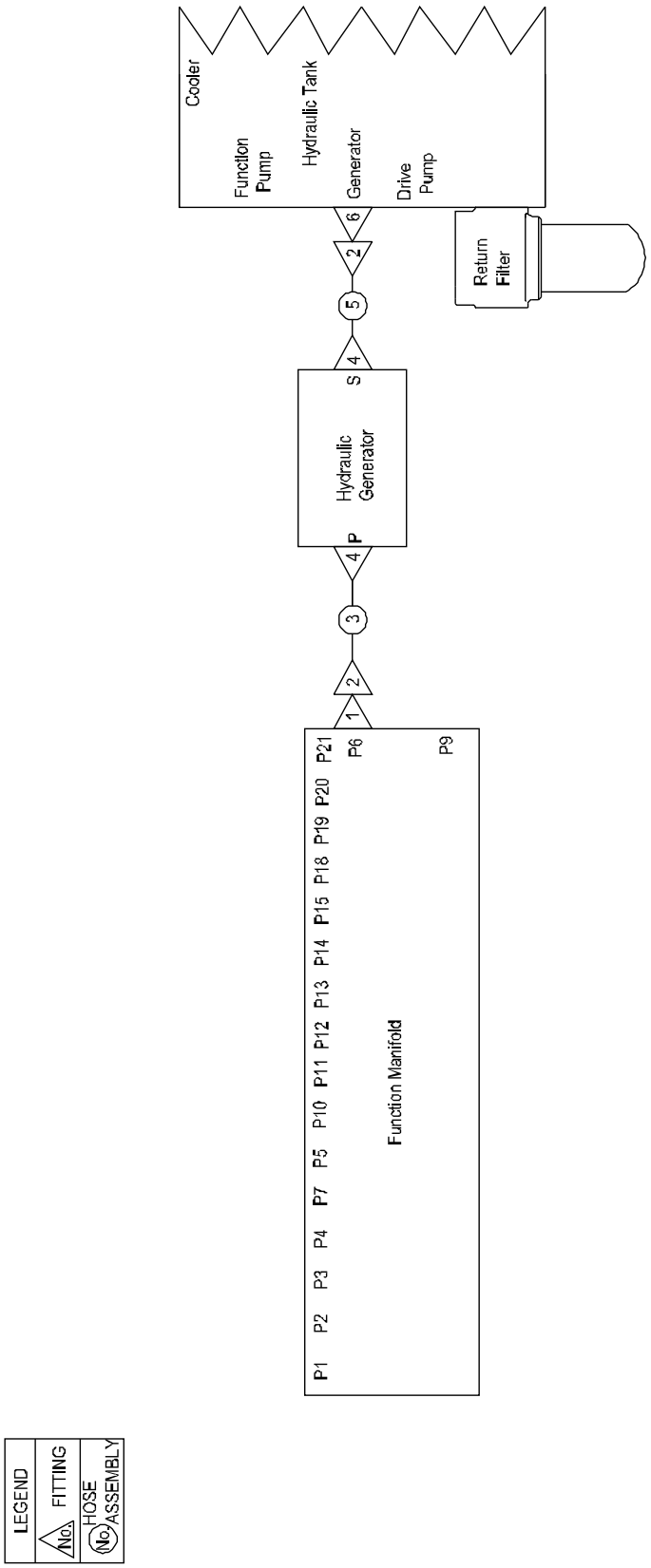

Figure 6-4 Hydraulic Generator Hydraulic Circuit (Option)

Item	Part Number	Description	Qty.	Remark
1	00001291	Fitting, Straight	1	
2	00001833	Fitting, 90°	2	
3	50003600	Hose Assembly	1	
4	00001500	Fitting, Straight	2	
5	50003601	Hose Assembly	1	
6	00003840	Fitting, Straight	1	

Figure 6-5 Functional Manifold Hydraulic Circuit

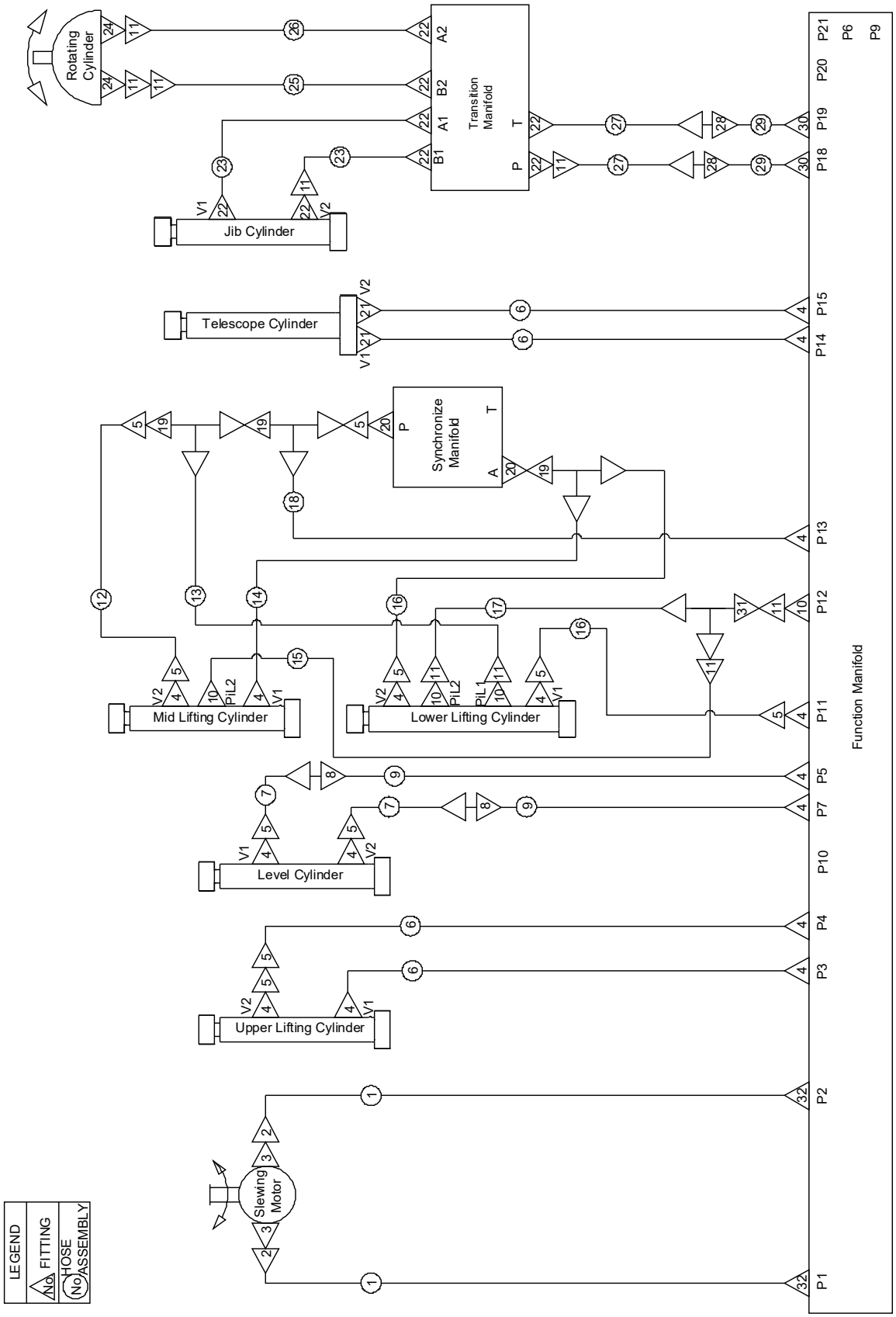

Figure 6-5 Functional Manifold Hydraulic Circuit

Item	Part Number	Description	Qty.	Remark
1	50003553	Hose Assembly	2	
2	00001834	Fitting, 90°	2	
3	00001774	Fitting, Straight	2	
4	00001291	Fitting, Straight	16	
5	00001833	Fitting, 90°	8	
6	50003564	Hose Assembly	4	GTBZ16A
	50003604	Hose Assembly	4	GTBZ18A
7	50003572	Hose Assembly	2	GTBZ16A
	50003613	Hose Assembly	2	GTBZ18A
8	00002136	Fitting, Straight	2	
9	50003568	Hose Assembly	2	GTBZ16A
	50003611	Hose Assembly	2	GTBZ18A
10	00001282	Fitting, Straight	4	
11	00001832	Fitting, 90°	8	
12	50003562	Hose Assembly	1	GTBZ16A
	50003617	Hose Assembly	1	GTBZ18A
13	50003559	Hose Assembly	1	
14	50003561	Hose Assembly	1	GTBZ16A
	50003616	Hose Assembly	1	GTBZ18A
15	50003563	Hose Assembly	1	GTBZ16A
	50003615	Hose Assembly	1	GTBZ18A
16	50003557	Hose Assembly	2	
17	50003560	Hose Assembly	1	
18	50003555	Hose Assembly	1	
19	00001238	Fitting, Tee	3	
20	00001290	Fitting, Straight	2	
21	00001292	Fitting, Straight	2	
22	00002921	Fitting, Straight	8	
23	50003272	Hose Assembly	2	

Figure 6-5 Functional Manifold Hydraulic Circuit (Continued)

Item	Part Number	Description	Qty.	Remark
24	00001769	Fitting, Straight	2	
25	50003275	Hose Assembly	1	
26	50003274	Hose Assembly	1	
27	50003574	Hose Assembly	2	GTBZ16A
	50003603	Hose Assembly	2	GTBZ18A
28	00002135	Fitting, Straight	2	
29	50003570	Hose Assembly	2	GTBZ16A
	50003606	Hose Assembly	2	GTBZ18A
30	00003758	Fitting, Straight	2	
31	00001237	Fitting, Tee	1	
32	00001294	Fitting, Straight	2	

Electrical

Section 7

Figure 7-1 Harness Components Installation

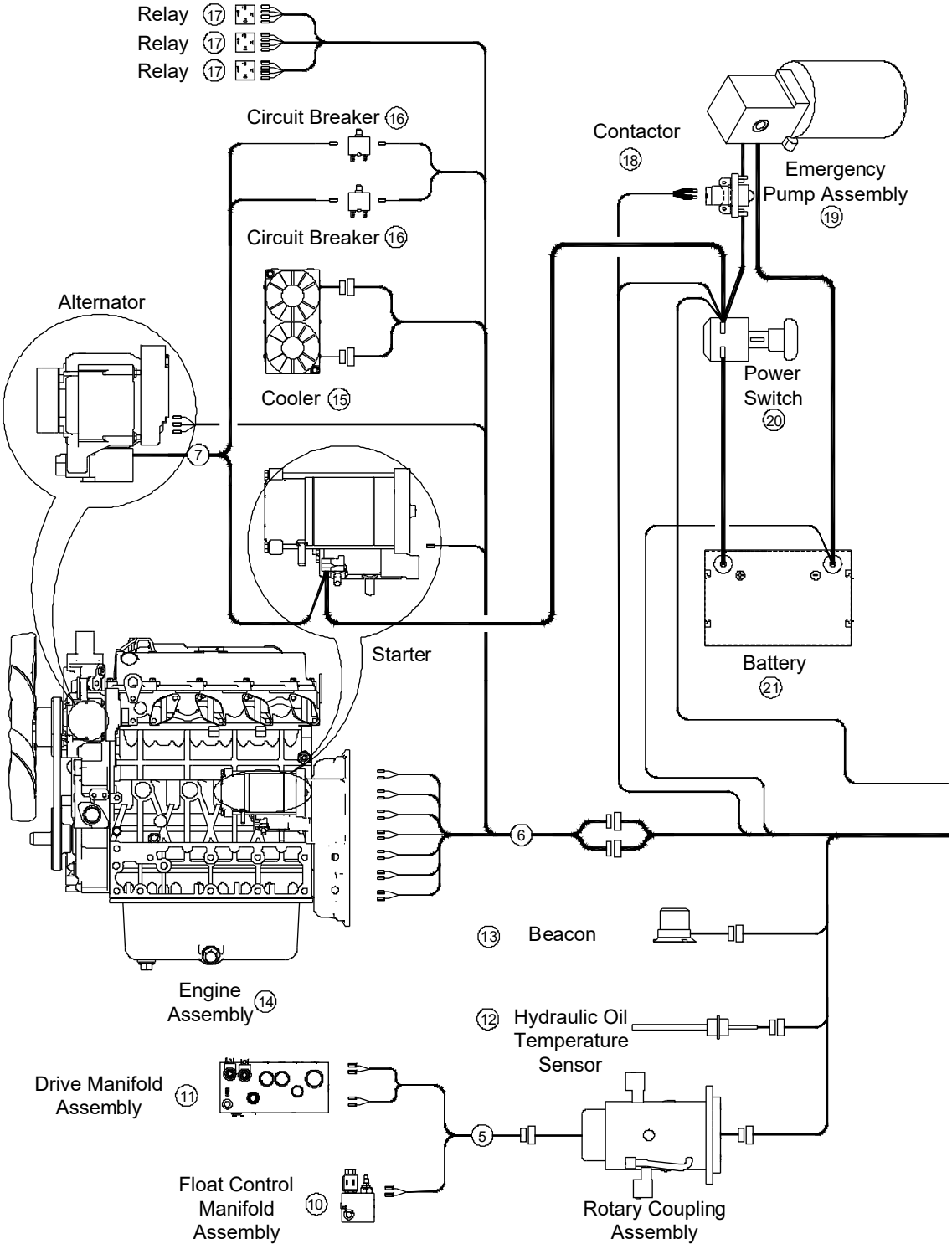

Figure 7-1 Harness Components Installation (Continued)

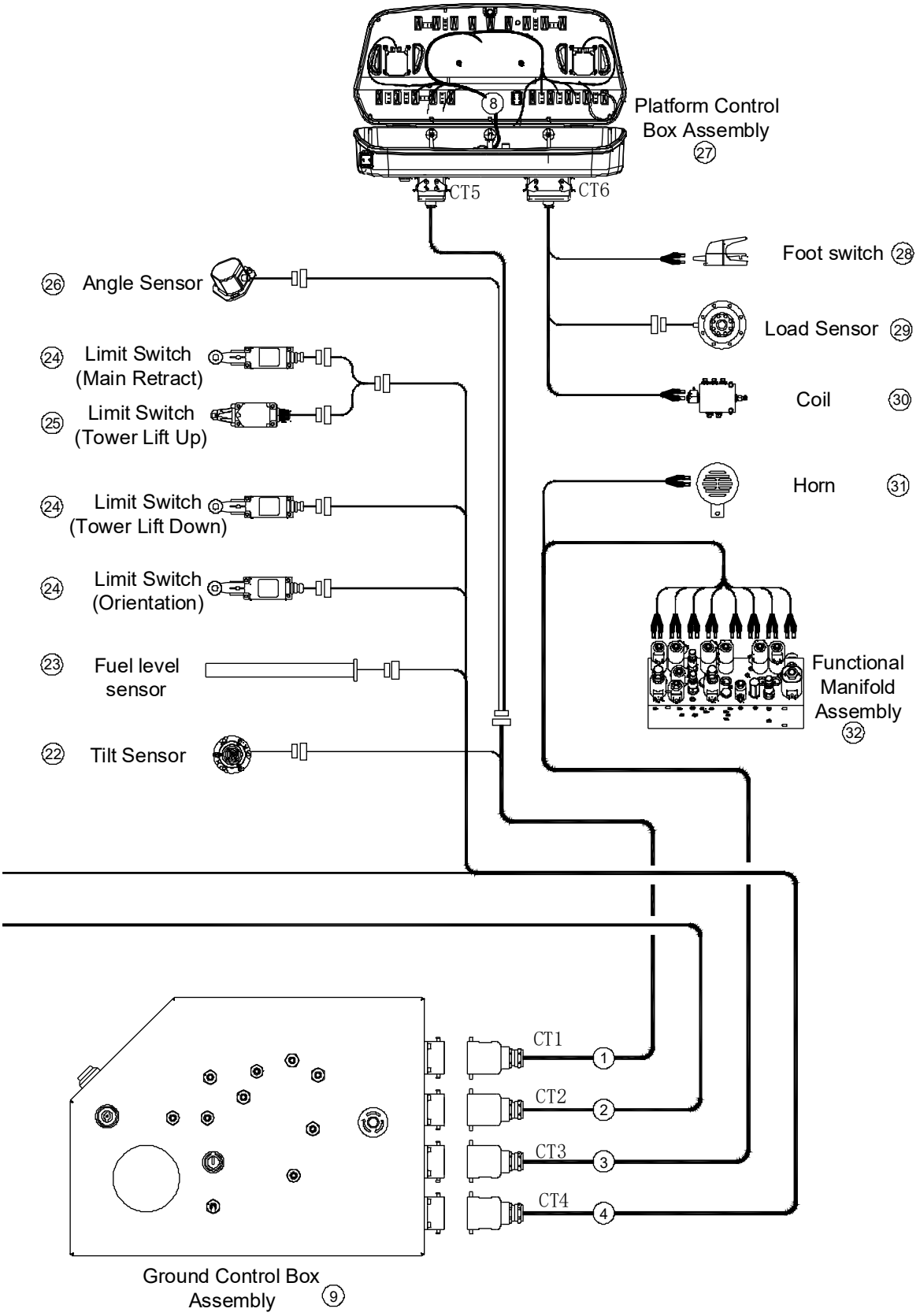

Figure 7-1 Harness Components Installation

Item	Part Number	Description	Qty.	Remark
1	00003934	CT1 Harness	1	
2	00003935	CT2 Harness	1	
3	00003936	CT3 Harness	1	
4	00003937	CT4 Harness	1	
5	00003939	Valve Assembly Harness	1	
6	00003938	Engine Harness	1	
7	00004273	Power Harness	1	
8	00002598	Platform Control Box Assembly Harness	1	
9		Ground Control Box Assembly *(See Figure 2-14 for Breakdown)*	1	
10	00003800	Oscillate Manifold *(See Figure 1-7 for Breakdown)*	1	
11	00001861	4×4 Drive Manifold *(See Figure 1-9 for Breakdown)*	1	
12	00000645	Hydraulic Oil Temperature Sensor	1	
13	00000663	Beacon	1	
14	00002152	Engine	1	
15	00001874	Radiator	1	
16	00002208	Circuit Breaker	2	
17	00002206	Relay	3	
18	00002205	Contactor	1	
19	90005017	Emergency Pump Assembly	1	Either-Or
	00006580		1	
20	00000655	Power Switch	1	
21	00004485	Battery	1	
22	00000642	Tilt Sensor	1	
23	00002201	Fuel Level Sensor	1	
24	00000748	Limit Switch	3	
25	00000750	Limit Switch	1	
26	00000643	Angle Sensor	1	

Figure 7-1 Harness Components Installation (Continued)

Item	Part Number	Description	Qty.	Remark
27		Platform Control Box Assembly *(See Figure 4-3 for Breakdown)*	1	
28	00000656	Foot Switch	1	
29	00006204	Load Sensor	1	
30	00002043	Coil	1	
31	00002212	Horn	1	
32	00003108	Functional Manifold *(See Figure 2-10 for Breakdown)*	1	

Decals

Section 8

Figure 8-1 Decals Installation

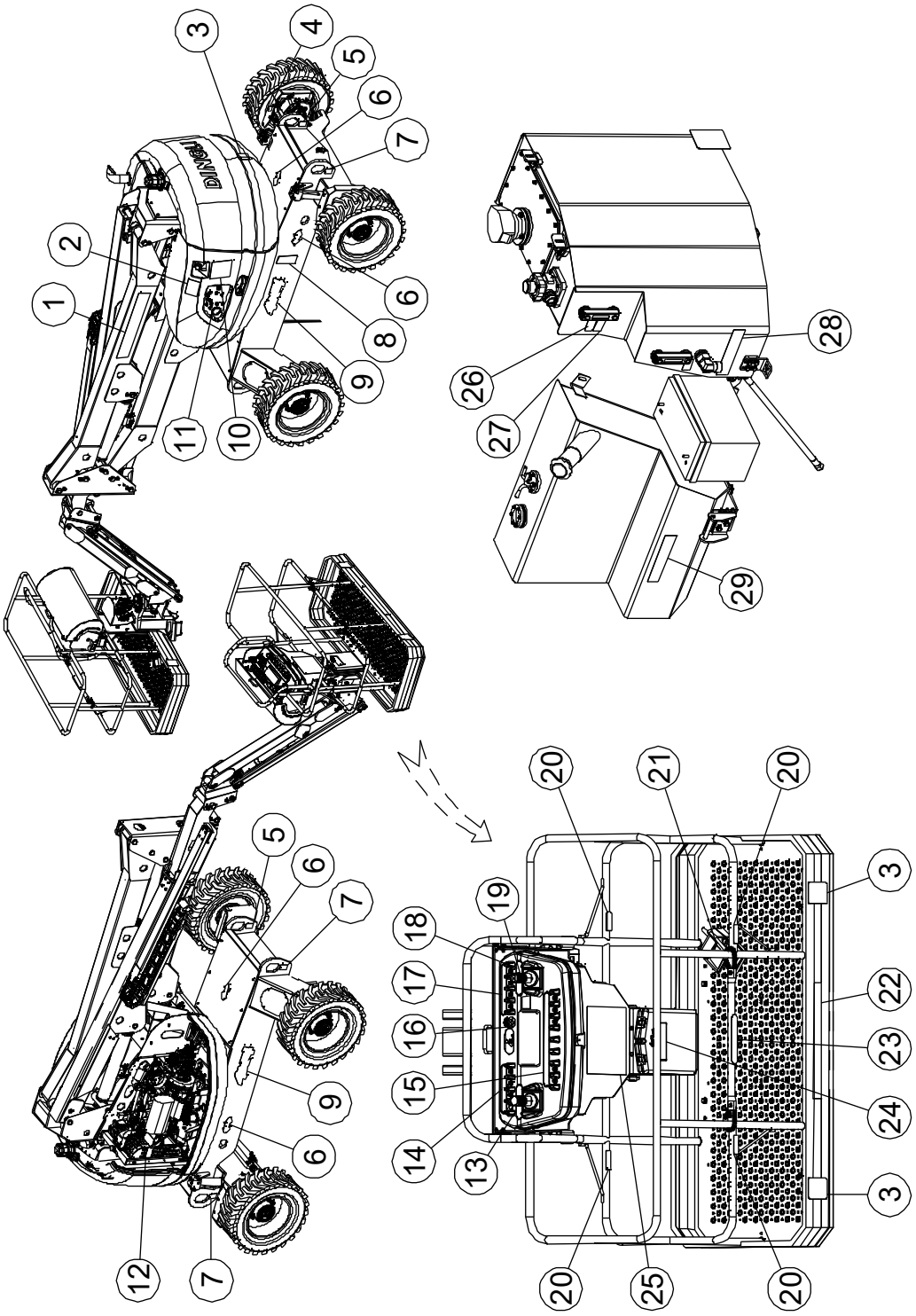

Figure 8-1 Decals Installation

Item	Part Number	Description	Qty.	Remark
1	09630003	Decal, Label-GTBZ16A	1	GTBZ16A
	09630004	Decal, Label-GTBZ18A	1	GTBZ18A
2	09420009	Decal, Warning-Filling diesel warning	1	
3	09420005	Decal, Warning-Crushing hazard	5	
4	09310199	Decal, Instructions-Maximum wheel load 3830kg	4	GTBZ16A
	09310201	Decal, Instructions-Maximum wheel load 4040kg	4	GTBZ18A
5	09310049	Decal, Instructions-Lift point	4	
6	09310051	Decal, Instructions-Directional arrows	4	
7	09310050	Decal, Instructions-Tie down point	4	
8	09210006	Nameplate, Manufacturer serial number	1	
9	09910004	Decal, Label-4×4	2	
10	09420013	Decal, Warning-Electrocution hazard	1	
11	09120002	Decal, Ground control panel	1	
12	09420011	Decal, Caution-High temperature	1	
13	09140009	Decal, Platform control panel	1	
14	09140007	Decal, Platform control panel	1	
15	09140011	Decal, Platform control panel	1	
16	09140012	Decal, Emergency stop panel	1	
17	09140008	Decal, Platform control panel	1	
18	09140010	Decal, Platform control panel	1	
19	09440100	Decal, Warning-Refill engine oil in time	1	
20	09440059	Decal, Label-Lanyard anchorage point	4	
21	09440057	Decal, Warning-Footswitch	1	
22	09440055	Decal, Label-Capacity 230kg	1	
23	09340016	Decal, Instructions-Open/close	1	
24	09340001	Decal, Notice-Keep the manual with the machine	1	
25	09440092	Decal, Danger-General safety rules	1	

Figure 8-1 Decals Installation (Continued)

Item	Part Number	Description	Qty.	Remark
26	09310052	Decal, Instructions-Highest oil level	1	
27	09310053	Decal, Instructions-Lowest oil level	1	
28	09310054	Decal, Instructions-Hydraulic	1	
29	09320003	Decal, Instructions-Diesel	1	

Figure 8-1 Decals Installation (Continued)

